The City of Winnipeg

Water & Waste Department

Identification Standard

Document Code:

Revision: 03

Original Approved By:	Geoff Patton, Manager of Engineering	June 6/13 Date

This page is intentionally blank.

REVISION REGISTER					
Rev.	**Description**	**Date**	**By**	**Checked**	**Approved**
00	Issued for City Use	2013-05-31	C. Reimer	C. Reimer	C. Reimer
01	Miscellaneous Revisions	2016-04-04	C. Reimer	P. Biesse	C. Wiebe
02	Miscellaneous Revisions	2017-03-24	C. Reimer	P. Biesse L. Harrington	-
03	Added Sections 2.5.5 and 2.5.6 Added Fluid Commodity Codes Miscellaneous Minor Corrections / Revs.	2018-05-08	C. Reimer	P. Biesse L. Harrington	C. Wiebe

This document is owned and maintained by the Asset Management Branch of the Engineering Services Division. For questions, comments or revisions please contact the Asset Management Branch Head.

TABLE OF CONTENTS

1 Introduction 7
1.1 Scope of the Standard 7
1.2 Application 7
1.2.1 Re-identification 8
2 General 9
2.1 General Identification Requirements 9
2.2 Facility Code 10
2.3 Area Code 10
2.4 Functional Designations 11
2.5 Equipment Number 12
2.5.1 Uniqueness 12
2.5.2 Number of Digits 13
2.5.3 Equipment Number Ranges 13
2.5.4 Sequential Logical Numbering 13
2.5.5 Coordination with Equipment Descriptions 15
2.5.6 Additional Requirements for Wastewater Treatment Facilities 16
2.6 Subcomponents 16
2.6.1 Subcomponent Identifier Format 16
2.6.2 Use of Subcomponent System 17
2.6.3 Subcomponent Examples 18
3 Architectural 19
3.1 Room Identifier 19
3.1.1 Building Level Designation 20
3.1.2 Drawing Representation 21
3.1.3 Room Numbering Guidelines 21
3.2 Door Identification 23
4 Mechanical / Process Equipment 25
4.1 Identifier Format 25
4.1.1 Component Numbers 25
4.2 Functional Designations 26
4.3 HVAC Grilles 29
4.4 Subcomponents 30
5 Piping and Duct 31
5.1 Pipe and Duct Designation 31
5.1.1 Nominal Pipe Sizes 32
5.1.2 Fluid Commodity Codes 33
5.1.3 Piping Material 38
5.1.4 Insulation Material / Type 39
5.2 Piping and Duct Components 40
5.2.1 Manual Valve Identifier Format – Minor Valves 40
5.2.2 Manual Valve Identifier Format – Major Valves and Valves with Instrumentation 42
5.2.3 Manual Valve Identifier Format – Instrumentation Isolation and Bypass Valves 43
5.2.4 Miscellaneous Piping Equipment Identifier Format 44
5.2.5 Miscellaneous Ducting Equipment Identifier Format 45
5.2.6 Cathodic Protection Components 46

5.2.7 Sample P&ID 47

6 Electrical 49

6.1 Equipment Identifier Format 49
6.2 Electrical Functional Designations 50
6.3 Type Modifier 52
6.4 Device-Specific Identifier Formats 53
6.4.1 Receptacle Identifiers 53
6.4.2 Power Cables Associated with Identified Equipment 54
6.4.3 General Purpose Cables – Lighting & Receptacles 55
6.4.4 Junction Boxes - Power 56
6.4.5 Interlock Keys 57
6.4.6 Wire Tags 58
6.5 Subcomponents 62
6.5.1 Tie Circuit Breakers 64
6.6 Examples 65
6.6.1 Example 1 65
6.7 Fire Alarm System Devices 66
6.7.1 Identifier Format 66
6.7.2 Fire Alarm Device Designations 67
6.7.3 Drawing Format 67
6.7.4 Wire Tags 68
6.8 Security Devices 69
6.8.1 Device Identifier Format 69
6.8.2 Security Device Designations 70
6.8.3 Security Equipment Designations 71
6.8.4 Equipment Subcomponent Designations 71
6.8.5 Wire Tags 72

7 Automation 73

7.1 Instrumentation 73
7.1.1 Instrument Identifier Format 73
7.1.2 Drawing Format 74
7.1.3 Instrument Functional Designations 75
7.1.4 Loop Numbers 80
7.1.5 Type Clarification 81
7.1.6 Valve Identification 82
7.1.7 Multi-Function Instruments 84
7.1.8 Additional Clarifications 84
7.2 Automation Equipment 85
7.2.1 Identifier Format 85
7.2.2 Functional Designations 86
7.2.3 IT Equipment Designations 87
7.3 Automation Cables 88
7.3.1 Instrumentation Cables 88
7.3.2 Cables Associated with Identified Equipment 89
7.4 Sample P&ID 90
7.5 Wire Tags 91
7.5.1 Power Circuits within Control Panels 91
7.5.2 Control Circuits 92
7.5.3 Analog Signal Circuits - Instruments 93

7.5.4 I/O Wiring 94
7.6 Subcomponents 96
7.6.1 Instrumentation Subcomponents 96
7.6.2 Panel Subcomponents 97
7.7 Software Configuration File Naming 97
7.8 I/O and Signal Tags 99
7.8.1 Discrete Input Signals 99
7.8.2 Discrete Output Signals 101
7.8.3 Analog Signals Generated From Equipment 103
7.8.4 Analog Measured Signals Generated From Instruments 104
7.8.5 Analog Output Signals 105
7.8.6 Control System Software Implementation 106

8 Communication Equipment 107
8.1 Identifier Format 107
8.2 Functional Designations 108
8.3 Network Cables 109

Appendix A Facility Codes cxi
Appendix B Facility Area Codes 113
Appendix C Master Equipment Functional Designations 119
Appendix D Equipment Number Ranges 125
Appendix E Sample Drawings 131

1 INTRODUCTION

This Water and Waste Department Identification Standard is to be referenced for consistent and accurate identification for all process, mechanical, electrical, and automation equipment. The standard also provides guidance regarding architectural room identification and communication equipment. This document provides clear guidance to department personnel, as well as external consultants, regarding appropriate equipment identification. A consistent standard has been developed for all Water and Waste groups, including Collections, Land Drainage, and Solid Waste (as applicable), however it is acknowledged that some exceptions for various groups may be required due to special circumstances, or existing established precedent.

1.1 Scope of the Standard

This identification standard applies to all City-owned Water and Wastewater facilities, which includes the following facilities:

- The Water Treatment Plant
- Regional water pumping stations
- The Shoal Lake Intake Facility
- Remote water facilities, including standpipes, valve chambers, boathouses, etc.
- Wastewater treatment facilities
- Wastewater lift stations
- Flood pumping stations
- Underpass sites
- Wastewater diversion stations
- Deep well locations
- Fountain locations
- Land drainage facilities
- Combined Sewer Overflow facilities
- Current and future remote wastewater sites (outfalls, valve chambers, etc).

1.2 Application

Existing facilities do not necessarily comply with this standard. The expectations regarding application of this standard to existing facilities must be decided on a case-by-case basis, however general guidelines for application are presented as follows:

- All new facilities must comply completely with this standard.
- All major upgrades to a facility, or a larger facility's area, must completely comply with this standard. Any existing equipment within the area being upgraded should be re-identified.
- All minor upgrades should utilize this standard as far as practical for new equipment, however in some cases compromise with the existing facility identification practice may be required.

For example, if adding a single pump to the WEWPCC facility, it is recommended to identify the pump as S230-P, rather than P-S230.

1.2.1 Re-identification

When equipment is re-identified to this new standard, it is recommended that the following be implemented:

- All equipment lamacoids and labels are to be replaced with the new identifier.
- All drawings that are being modified as part of the work are to utilize the new identifier. Major drawings such as P&IDs and Single Line Diagrams should display both the new and the old identifiers, in the following format:

  New-Identifier
  (was Old-Identifier)

- Generate a master equipment list with the new identifier, old identifier, and equipment description.

2 GENERAL

2.1 General Identification Requirements

General identification requirements are as follows:

- Unambiguous Identity
  - All equipment identifiers shall be unique. No two pieces of equipment within the same facility are to share a common identifier.
- Consistency
  - The identification system is to be consistent across all facilities.
  - Prior to addition of a new identifier type, all new additions to the standard should be vetted by a group, to avoid inconsistent additions to the standard.
  - Spaces within identifiers are not permitted. For example, PNL M10 is not a substitute for PNL-M10.

Allowable characters in equipment identifiers are as follows:

- Uppercase letters A through Z
- Numerals 0 through 9
- Hyphen “-“ (or underscore “_” in software packages where hyphens are not supported)
- Period “.”(or underscore “_” in software packages where periods are not supported)

No other symbols or characters or spaces shall be utilized in an identifier.

2.2 Facility Code

Each City of Winnipeg facility is assigned a unique, four-digit facility code. The facility code is to be used on drawings and documentation as required. The facility code appears within all City drawing numbers, but need not be shown within the content of the drawing. The facility code is deemed an optional component of equipment and instrument identifiers, with the preference to omit the facility code to reduce the overall length of identifiers.

Systems such as a central Supervisory Control and Data Acquisition (SCADA) system that monitors multiple facilities are to make use of the facility code to segregate components by facility. The implementation of the facility code may be by means of a hierarchical directory system whereby individual components are stored under a folder that is named by the facility code. If the database or system where the identifier is being stored supports an additional field for the facility code, or is based upon a hierarchical system where the identifier can be placed as a component off of a root facility branch, it is deemed to be acceptable to omit the Facility Code in the instrument identifier. For example, the City's current Computerized Work Management System (CWMS) has an integral asset list, where a field is provided for the facility. In this case, the facility code for the equipment identifier would not be entered.

A complete list of facility codes is provided in Appendix A.

2.3 Area Code

The Area Code (also historically identified as Process Area Codes) identifies the physical area or building in which the equipment is located. A single letter character from A to Z represents a physical area. Some specific recommendations regarding implementation and designation of area codes are:

- For new construction, ensure that areas codes are allocated for a large enough area, such that the 26 available area codes are not exhausted.
- The Area Code represents the physical location of the equipment, not the equipment function. For example, a hot water pump located in the P area is designated as having a P area code, not a B (Boilers) area code. This is much more straightforward for both assignment and maintenance personnel.
    - Note however, that in some cases there are multiple pieces of equipment, all associated with the same primary piece of equipment, but in different locations with different area codes. In this case, the equipment Area Code should be selected based upon the major or primary equipment. For example, the motor starter for pump P-M101 would be identified as MS-M101, even if the motor starter is in the S area. The motor starter is directly associated with the pump and it would be confusing and unsafe to have different identifiers. An example is provided in Figure 6-4.
- For similar facilities, it is beneficial, but not mandatory, that similar process codes are utilized. For example, ideally the letter P should represent the Primary Clarifier area at all wastewater treatment plants, but would represent something different for water facilities.

The Area Codes for existing facilities are listed in Appendix B.

2.4 Functional Designations

The functional designation represents the function of the equipment. A complete list functional designations, for all disciplines, is shown in Appendix C.

It may be required to add new functional designations, where the existing list does not cover a new application. It is recommended that the following be reviewed prior to the addition of new designations:

- Functional designations for equipment are to be limited to a maximum of four characters. While most instrument designations will be four characters or less, it is possible to have up to five characters in a instrumentation designation, as per ISA 5.1.
- Utilize general, rather than specific, functional designations. For example, utilize the general pump designation P and avoid specific pump designations such as:
    - CWSP Chilled Water Supply Pump
    - CHRP Chilled Water Return Pump
    - ELP Effluent Lift Pump
    - CFP Chemical Feed Pump
    - SLP Sludge Pump
- Update the master list in Appendix C, and ensure there is no overlap with other disciplines.
- It is acceptable to re-utilize an existing designation at an existing facility, even if is not listed in Appendix C, if it is deemed that there are too many existing documentation references to modify. In this case, the designation will be a unique special case, and is not to be added to Appendix C.
- Consider the use of the letter U to designate the equipment if the quantity of the equipment is low.

2.5 Equipment Number

2.5.1 Uniqueness

The equipment number is a number utilized to identify a specific instance of a piece of equipment within a certain *Area Code*. Equipment numbers may be re-used within different *Area Codes*.

Generally, equipment numbers should be unique for each piece of equipment, but equipment that is functionally related, and has a one-to-one relationship, may (but is not required to) share a common equipment number. The overall equipment identifier must still be unique. See Figure 2-1 for an example.

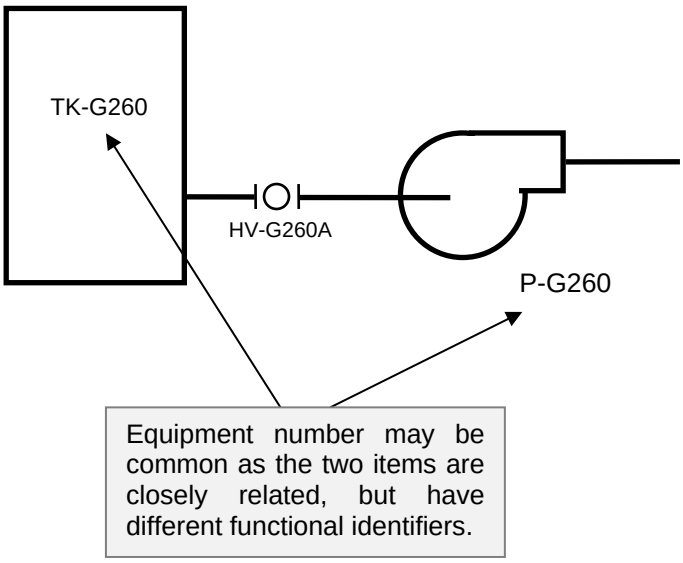

Figure 2-1: Equipment Number Example – Functionally Related

Notes:

1. *Electrical and mechanical equipment, that are not functionally related, must not share a common equipment number. For example, a MCC-M100, and a P-M100 should not exist within the same facility.*
2. *As per Sections 6 and 7, all related electrical and automation, including instrumentation, equipment identification will be based upon the associated Equipment Number. When proposing a common Equipment Number for multiple equipment items, consider the impact on the Electrical and Automation disciplines to ensure that the proposed numbering is effective for all disciplines.*

2.5.2 Number of Digits

Equipment numbers will typically be comprised of three digits in medium to large size facilities. However in small facilities, with less than 50 equipment identifiers, it is permissible to utilize two digit equipment numbers. Use of two digit equipment numbers will be typical for most Collections facilities, such as wastewater lift stations and flood pumping stations. Note that where two digit equipment numbers are utilized, the instrument loop number will also be shortened by a digit, to a total of three digits. In addition, the NEWPCC Facility is very large and requires the use of four digit equipment numbers and five digit instrument loop numbers.

Table 2-1 : Identifier Length

Facility	Estimated Equipment Identifiers	Equipment Number of Digits	Instrument Loop Number of Digits	Example Equipment Number
Small	< 50	2	3	P-M01
Medium to Large	50 – 3000	3	4	P-M101
NEWPCC	> 3000	4	5	P-M1101

2.5.3 Equipment Number Ranges

For each facility, the equipment numbers are grouped and allocated in ranges to specific process functions. The range allocations are on a site by site basis, although efforts should be made to utilize common ranges for similar types of facilities.

Equipment number ranges are defined in Appendix D.

Note that for wastewater treatment plants, the WSTP Project Document Numbering Standard (IMS Document PG-RC-PC-05) identifies a Process Code. The Process Code is analogous to the Equipment Number Ranges, and both are indicated in Appendix D for wastewater treatment plants.

2.5.4 Sequential Logical Numbering

Provide equipment numbering with regards to logical sequencing of the equipment numbers as per process flow. Gaps in sequential numbering are acceptable and appropriate provided that they do not excessively waste equipment number ranges. Group process or equipment trains such they utilize a common range. See the examples in Figure 2-2.

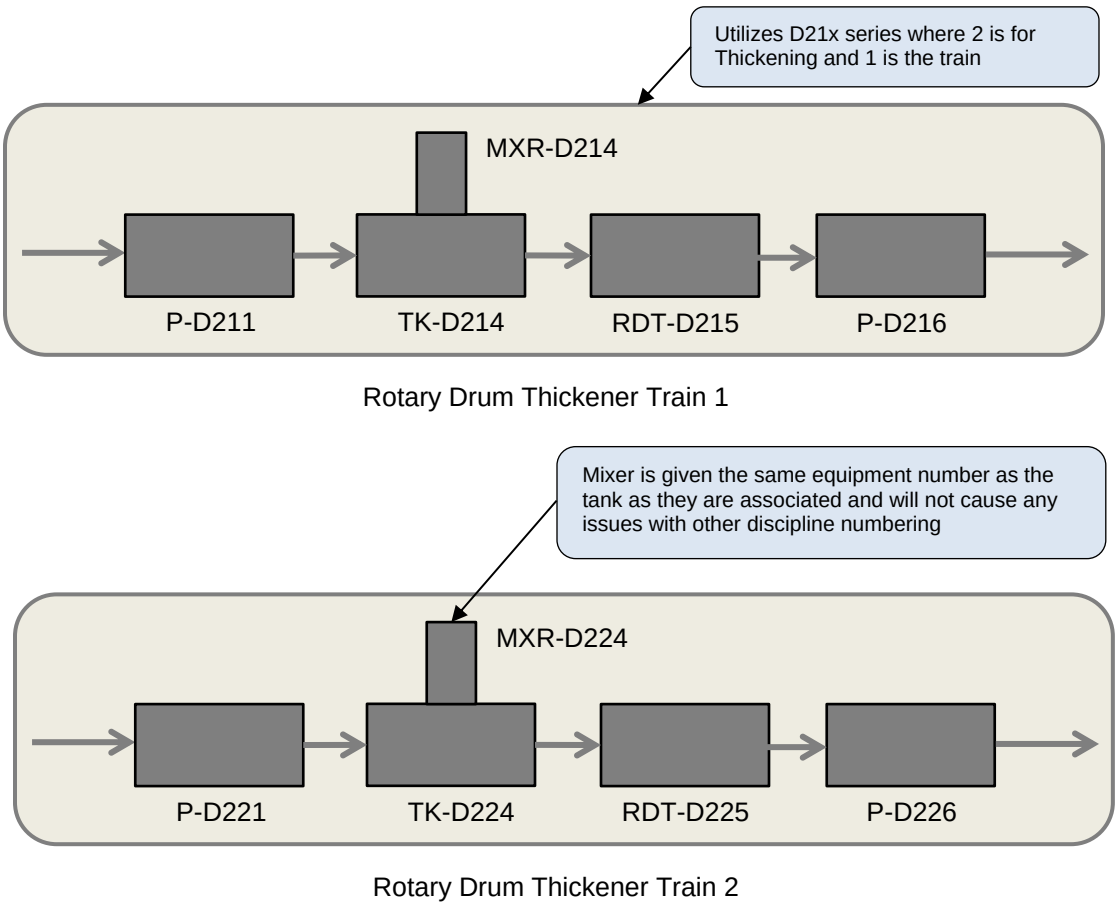

Figure 2-2 : Sequential Logical Numbering Example

2.5.5 Coordination with Equipment Descriptions

As far as practical, ensure that the last digit(s) of equipment numbers matches the equipment descriptions.

Examples:

P-G201	The identifier for “Grit Pump 1”
P-G202	The identifier for “Grit Pump 2”

2.5.6 Additional Requirements for Wastewater Treatment Facilities

2.5.6.1 Coordination of Equipment with Electrical Power Supply

The majority of electrical distribution within wastewater treatment facilities is typically configured in a redundant manner. Where redundant electrical distribution is provided, identify the electrical distribution such that the distribution normally fed from Bank 1 ends in an odd number and the distribution normally fed from Bank 2 ends in an even number.

For equipment, as far as practical, provide:

- An odd equipment number for equipment fed from an odd numbered electrical distribution equipment.
- An even equipment number for equipment fed from an even numbered electrical distribution equipment.

Examples:

P-G201	Fed from MCC-G701, which is connected ultimately to Bank 1.
P-G204	Fed from MCC-G702, which is connected ultimately to Bank 2.

2.6 Subcomponents

In some cases, it is appropriate for equipment to be designated as a component of another identified piece of equipment, rather than an independent unit. Equipment subcomponents will typically be expressed as using a dot "." field, followed by the subcomponent identifier.

2.6.1 Subcomponent Identifier Format

E*	**.**	**SSSS**	**-**	**N**
Equipment Identifier		Subcomponent Functional Designation	-	Subcomponent Number

Where,

E*	is the *Equipment Identifier*, of the base equipment, as designated in this document.
SSSS	is the *Subcomponent Functional Designation*, which is one to four letters. Typical subcomponent designations are shown in other sections of this document.
N	is the *Subcomponent Number*, an optional field to be utilized when there are multiple subcomponents within the base equipment.

Some examples of subcomponents are as follows:

CMP-R521.LOP	Lube oil pump for compressor CMP-R521, where the pump is integrated into the compressor skid and driven by the compressor motor.
PNL-P712.MCB	Panelboard PNL-P712 main breaker
VFD-G612.RCTR-1	Line reactor for VFD-G612 (integrated in VFD enclosure)

In a full hierarchical system, almost every piece of equipment could potentially be viewed as a subcomponent or child of another system. For example, an agitator could potentially be viewed as a component of a tank. However, this approach would lead to an extensive hierarchical system that is not recommended for general plant identification. Thus, the following rules of thumb are presented as a guide for classification of an item as a subcomponent.

Identification of a device as a subcomponent should be considered when:

- The device is a constituent component that is physically enclosed in, or attached to, the larger equipment;
- The device is normally grouped as a component of the larger equipment when the equipment is purchased; and
- Operations personnel would normally refer to the device as a component of the larger equipment, rather than a separate device.

2.6.2 Use of Subcomponent System

It is deemed that there are numerous benefits to utilizing the subcomponent system, as indicated below:

- Due to the naming structure of subcomponents, it is clear as to what parent component the subcomponent belongs to.
- Subcomponents allow for smaller instrument bubbles to show functionality such as limit switches, without wasting drawing space. For devices such as large multi-turn actuators, with internal torque switches, hand switches, and limit switches, as well as many other types of equipment, this can be a significant savings in drawing space without any loss of identification capability.
- The use of subcomponents helps avoid the case where the subcomponent devices are placed on the equipment or instrument list, and confuse personnel because they cannot be found in the field. This is also particularly important to construction personnel, who must coordinate the purchase, storage, installation, and commissioning of these devices.
- The use of subcomponents aligns more closely with the current direction of control system software implementations, where the database and system model have hierarchical attributes, rather than a simple linear list of tags.

2.6.3 Subcomponent Examples

Two examples of the use of subcomponents are shown in Figure 2-3 and Figure 2-4.

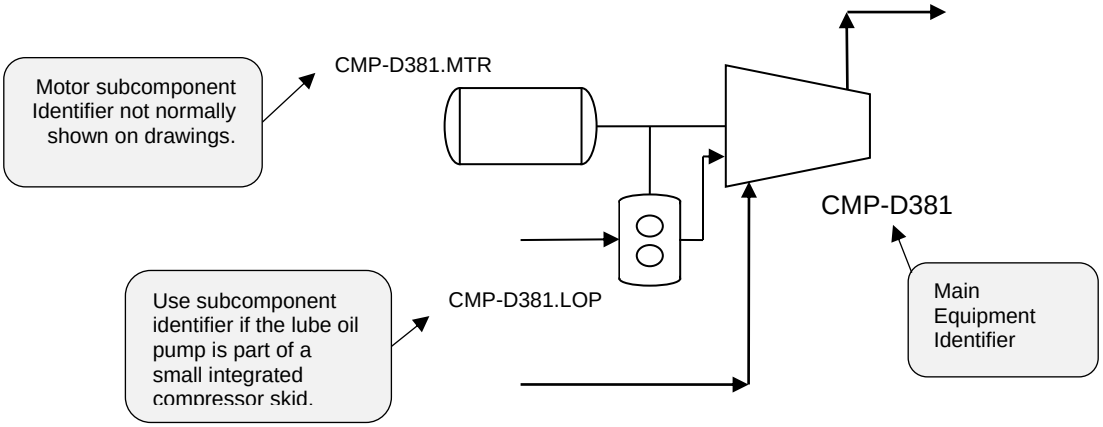

Figure 2-3 : Lube-Oil Pump Subcomponent Example

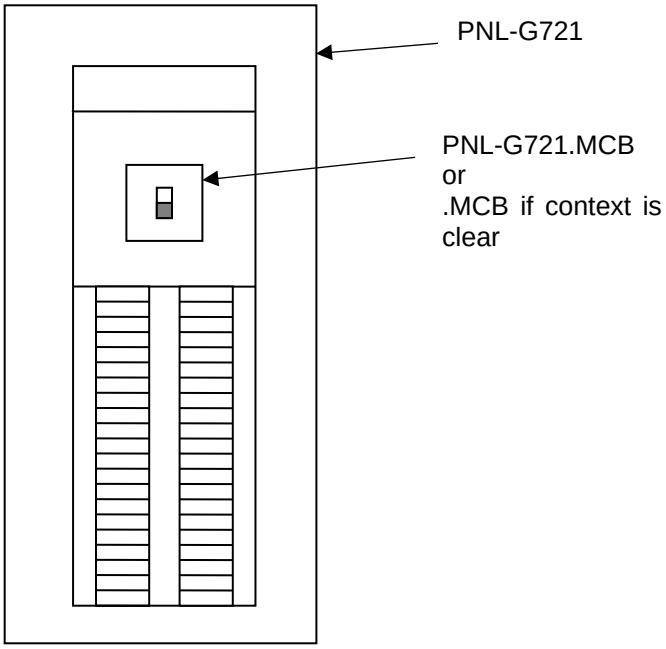

Figure 2-4 : Electrical Subcomponent Example – Main Circuit Breaker

3 ARCHITECTURAL

3.1 Room Identifier

It is required to identify room numbers for architectural purposes and to allow for identification of specific equipment that is associated with rooms. Fire alarm system and security system component identification, as discussed in Sections 6.7 and 6.8, are associated with room numbers. Room numbers will be identified as follows:

FFFF	**-**	**RM**	**-**	**A**	**-**	**L**	**RR**	**S**
Facility Code (Optional)	-	Room Designation	-	Area Code	-	Level	Room Number	Suffix (Optional)

Where,

FFFF	is the *Facility Code*, from Appendix A. The *Facility Code* will typically be implied, and would only be fully written where required.
RM	is the *Room Designation*, which is comprised of the letters RM.
A	is the *Area Code*, which is based on Section 2.3.
L	is the *Level*, which shall typically be one or two characters, as described in Section 3.1.1.
RR	is the *Room Number*, which shall typically be two digits, except as described in Section 3.1.1.
S	is the *Suffix*, which can be utilized to indicate room divisions as required. This should only be utilized for cases such as rooms that are divided by a movable barrier.

Examples:

RM-S-115	Room 15 in the Secondary Clarifier area, on the main level.
RM-M-222	Room 22 in the Main Building area, on the second level.
RM-G-BA9	Room 9 in the Grit area, lower level 2.

Note: A hyphen is utilized between the Area Code and level, to ensure that room numbers are not potentially confused with equipment numbers.

3.1.1 Building Level Designation

The building level designation shall be based upon Table 3-1 below.

Table 3-1 : Building Level Identifiers

Level	Description	Room Number Digits	Example
4	Fourth Floor	2	RM-M-405
3	Third Floor	2	RM-M-320
2	Second Floor	2	RM-M-251
1	Main / First Floor	2	RM-M-123
B	Lower Level 1 / Basement	2	RM-M-B52
BA	Lower Level 2	1	RM-M-BA5
BB	Lower Level 3	1	RM-M-BB1
EX	Exterior (See Note 4)	1	RM-M-EX1

Notes:

1. *Level 1 should be the uppermost floor entered at grade or at most, one half stair flight above.*
2. *Large mezzanines shall be numbered as a whole floor. Example: When a mezzanine exists between the first floor and the next whole floor, it will be numbered as the second floor and the next whole floor would be the 3rd floor.*
3. *Usable attic floors and penthouse levels should be numbered as if they are whole floors. For example, a two-story penthouse atop a three floor building will be numbered as the fourth and fifth floors. Do not use prefixes such as "R" for roof level.*
4. *Use of the EX designation for exterior spaces is optional. One example where this designation may be required is for outdoor security equipment. It is recommended that the outdoor space be designated into zones, which replace the room number.*

3.1.2 Drawing Representation

Room numbers on drawings may be presented as shown in Figure 3-1. Note that the room designation “RM” may be omitted on drawings, when used with the ellipse symbol.

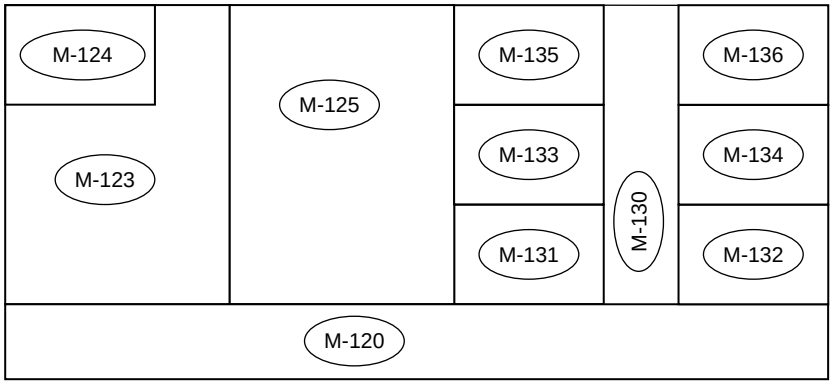

Figure 3-1 : Room Numbering on Drawings – Plan View

3.1.3 Room Numbering Guidelines

Utilize the following as a guide for room numbering:

- Numbers should flow from one end of the building to the other.
- Where corridors are present, use odd numbers on one side of a corridor and even numbers on the other side.
- Skip numbers as required to maintain succession of room numbering
    - In some instances, room numbers on one side of a corridor shall be skipped in order to maintain succession with the room numbers on the opposite side of the corridor. This may occur, for example, when a suite of rooms or large space is accessed through a single door and there are no other doors on that same side until further down the corridor. This will allow for future renovations that may convert suites or large spaces into separate or small rooms with a corridor door.
- Provide all accessible spaces with room numbers.
    - In addition to rooms, all interior spaces that can be directly accessed, such as corridors, vestibules, stairwells, elevator shafts, and accessible pipe spaces shall be numbered in a manner as consistent as possible with standard room spaces. Where doors or walls separate different areas of these spaces, each area shall receive its own unique number.
- Room numbers shall be assigned in a cohesive fashion between existing, new and modified facilities. Duplicate room numbers are not permitted under any circumstance.
- Identify stairwells with a single room identifier, with the main floor as the level. If the stairwell is not accessible from the main floor, utilize the access level closest to the main floor as room level designation. See Figure 3-2 for examples.

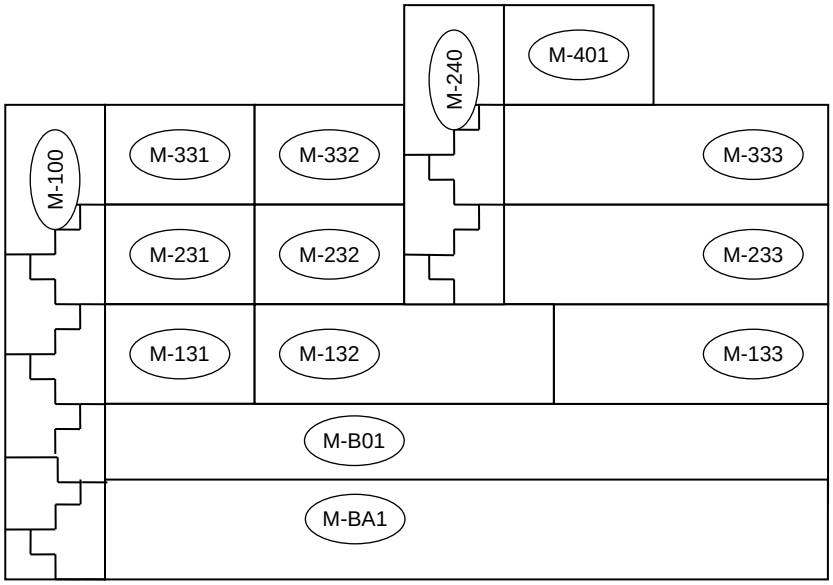

Figure 3-2 : Stairwell Identification Examples – Elevation View

- Rooms that span multiple levels should be identified with a level corresponding to the primary access level. See Figure 3-2 for examples of multi-level room identification.

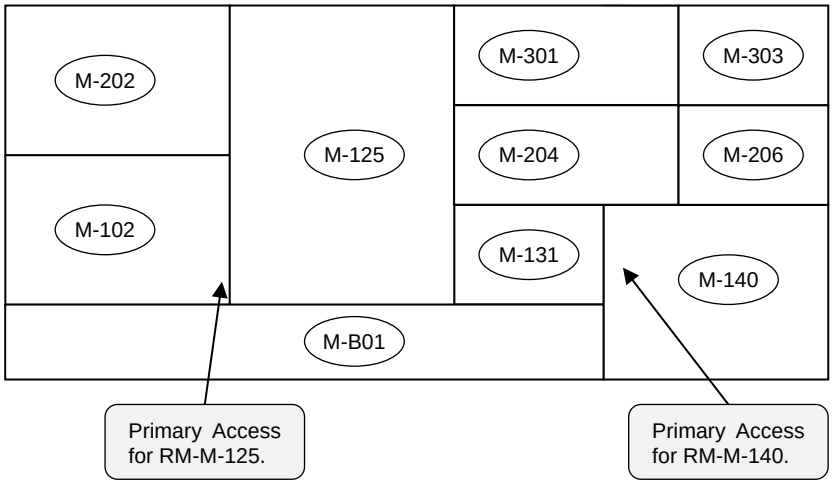

Figure 3-3 : Multi-Level Room Examples – Elevation View

3.2 Door Identification

It is required to identify door identifiers for architectural purposes and to allow for identification of specific equipment that is associated with rooms. Security system component identification, as discussed in Sections 6.8, are associated with door identifiers. Doors will be identified as follows:

FFFF	**-**	**D**	**-**	**A**	**-**	**L**	**RR**	**S**
Facility Code (Optional)	-	Door Designation	-	Area Code	-	Level	Room Number	Suffix

Where,

FFFF	is the *Facility Code*, from Appendix A. The *Facility Code* will typically be implied, and would only be fully written where required.
D	is the *Door Designation*, which is comprised of the letter D.
A	is the *Area Code*, which is based on Section 2.3.
L	is the *Level*, which shall typically be one or two characters, as described in Section 3.1.1.
RR	is the *Room Number*, which shall typically be two digits, except as described in Section 3.1.1.
S	is the *Suffix*, which is utilized to indicate the specific door. Double doors are to be identified with a single identifier.

Examples:

D-S-115A	Door A for Room 15 in the Secondary Clarifier area, on the main level.
D-M-222C	Door C for Room 22 in the Main Building area, on the second level.
D-G-BA9A	Door A for Room 9 in the Grit area, lower level 2.

This page is intentionally blank.

4 MECHANICAL / PROCESS EQUIPMENT

4.1 Identifier Format

Mechanical / process equipment will be identified as follows:

FFFF	**-**	**EEEE**	**-**	**A**	**NN(N)(N)**	**-**	**XX**
Facility Code (Optional)	-	Equipment Functional Designation	-	Area Code	Equipment Number	-	Component Number (Optional)

Where,

FFFF	is the *Facility Code*, from Appendix A. The *Facility Code* will typically be implied, and would only be fully written where required.
EEEE	is the *Equipment Functional Designation*, which is comprised of 1 to 4 characters from Section 4.1.14.2.
A	is the *Area Code*, which is based on Section 2.3.
NN(N)(N)	is the *Equipment Number* of the associated equipment. This will be three digits for medium to larger facilities, two digits for smaller facilities, such as Collections facilities, and four digits for very large facilities (NEWPCC).
XX	is the optional Component Number, which can be one or two digits, and shall be applied as per Section 4.1.1.

Examples:

CMP-G201	A compressor in the G area.
P-M645	A glycol pump in the M area.
R-R102	An oxygen reactor in the R area.
SF-F61	A supply fan in a flood station. Note the two digit equipment number for Collections facilities.
P-L01	The first lift pump in a wastewater lift station. Note that the equipment number for collections facilities in only two digits long.
UH-K631-2	The second unit heater that is controlled by the same thermostat or PLC output as unit heater K-631-1 (the unit heaters will always be on simultaneously)

4.1.1 Component Numbers

Component Numbers are suffixes to equipment numbers that are utilized to designate multiple components of a single system. Component numbers will increment starting at 1. Use of a component number is only acceptable if:

- The equipment with the same *Equipment Number* is functionally associated, and
- The equipment has no associated process control or the process control is common or the equipment is part of a common skid package.

Component Numbers shall not be utilized in the following scenarios:

- To address a shortage of available equipment numbers in a given series;
- Where the equipment is not functionally associated; or
- Where the equipment can be manually or automatically controlled to run independently.

Note: Use of the Component Number should not be common.

Examples of acceptable uses of Component Numbers:

If AHU-G634 is an air handler, and there is more than one fan in the air handler, it is acceptable to utilize component numbers to designate the individual fans.

4.2 Functional Designations

The functional designation represents the function of the equipment. A complete list functional designations is shown in Table 4-1.

Table 4-1 : Process / Mechanical Equipment Functional Designations

Functional Designation	Description	Notes
AD	Air Dryer	
AF	Aeration Fan	
AG	Agitator	
AHU	Air Handling Unit	Includes make-up air unit.
B	Blower	
BD	Balance Damper	See Section 5.2.5.
BDD	Backdraft Damper	See Section 5.2.5.
BFP	Back Flow Preventer	
BLR	Boiler	
~~BS~~	~~Bar Screen~~	Use SCR
BV	Balancing Valve	Manual mechanical balancing valve (not typically adjusted by operations). See Section 5.2.3
BVA	Automatic Balancing Valve	Automatic mechanical balancing valve. See Section 5.2.3
CAL	Calibration Column	
CC	Cooling Coil	
CDR	Condenser	
CE	Centrifuge	
CHLR	Chiller	
CM	Clarifier Mechanism	
CMP	Compressor	
CNV	Conveyor	Includes skimmers

Functional Designation	Description	Notes
CRN	Crane	
CT	Cooling Tower	
CU	Condensing Unit	
CV	Check Valve	See Section 5.2
CYC	Cyclone	
EDU	Eductor	
EF	Exhaust Fan	
F	Fan - General	
FA	Flame Arrestor	
FC	Fan Coil	
FD	Fire Damper	See Section 5.2.5. Utilize same equipment number as air handler / fan.
FDR	Feeder	Examples screw feeder, chlorinator, glycol make-up unit
FEX	Fire Extinguisher	
FG	Flap Gate	
FIL	Filter	
GR	Grille / Louvre – General	See Section 4.3.
GRD	Grille – Diffuser	
HC	Heating Coil	
HCE	Heating Coil, Electric	Duct based heater.
HE	Heat Exchanger	
HO	Hoist	
HOP	Hopper	
HP	Heat Pump	
HRC	Heat Recovery Coil	
HTR	Heater	General heaters, radiant, convectors, etc.
HUM	Humidifier	
HV	Hand/Manual Valve	See Section 5.2
INJ	Injector	
MXR	Mixer	
OD	Overhead Door	
P	Pump	
PCV	Pressure Control Valve (Pressure Regulator)	See Section 5.2.3
PSV	Pressure Safety/Relief Valve	See Section 5.2.3
R	Reactor (various processes)	

Functional Designation	Description	Notes
RDT	Rotary Drum Thickener	
RES	Reservoir	Large water containment structure.
S	Skid Package	
SA	Sampler	
SCBR	Scrubber	
SCR	Screen	Utilized for screening systems such as bar screens and perforated plate screens.
SD	Smoke Damper	See Section 5.2.5. Utilize same equipment number as air handler / fan.
SF	Supply Fan	
SL	Stop Logs	See Section 5.2.3
SLG	Sluice Gate	May only be utilized within existing facilities where the use of the SLG identifier is well established. The designation may not to be utilized for new or upgraded WSTP facilities. Identify as a valve (HV, XV, FV, etc).
STR	Strainer	See Section 5.2
TK	Tank	
TU	Terminal Unit (HVAC)	Includes CAV/VAV/Dual Duct boxes. Dampers are to be identified as per Section 7.1 – Instrumentation.
U	Miscellaneous Equipment Not In List	e.g. water softener
UH	Unit Heater	
UVR	Ultra-Violet (UV) Reactor	
V	Vessel, Pressure Vessel	e.g. air receiver, glycol expansion tank
W	Weir	
WCP	Washer / Compactor	Typical for wastewater screenings
WGB	Waste Gas Burner	

Notes:

1. *Equipment Functional Designations are to be unique, including electrical, automation, communication, and security equipment. Instrument Functional Designations may overlap Equipment Functional Designations.*
2. *See Appendix C for a master list of Equipment Functional Designations.*

4.3 HVAC Grilles

HVAC grilles, louvres and diffusers, will be identified as follows:

FFFF	**-**	**EEEE**	**-**	**A**	**NN(N)(N)**	**-**	**XX**
Facility Code (Optional)	-	Equipment Functional Designation	-	Area Code	Equipment Number	-	Component Number

Where,

FFFF	is the *Facility Code*, from Appendix A. The *Facility Code* will typically be implied, and would only be fully written where required.
EEEE	is the *Equipment Functional Designation*, which is comprised of 2 to 4 characters from Section4.2.
A	is the *Area Code*, which is based on Section 2.3.
NN(N)(N)	is the *Equipment Number* of the associated equipment. Where an equipment number is not associated, allocate an equipment number.
XX	is the *Component Number*, which can be one or two digits, and will increment starting at 1.

Examples:

GRD-M645-1	The first diffuser grille associated with SF-M645.
GR-P682-1	Intake louvre associated with SF-P682.
GR-P682-22	The 22nd grille associated with SF-P682.

4.4 Subcomponents

The following designations are to be utilized for mechanical equipment subcomponents. See Section 2.6 for general rules on application of subcomponents.

Table 4-2 : Mechanical Equipment Subcomponents

Subcomponent Designation	Description	Notes
CMP	Compressor	e.g. component of a chiller.
F	Fan	
CC	Cooling Coil	May be a subcomponent of a AHU
HC	Heating Coil	May be a subcomponent of a AHU
HRC	Heat Recovery Coil	May be a subcomponent of a AHU
LOP	Lube Oil Pump	
MTR	Motor	
SWP	Swash Plate	
VSD	Variable Speed Drive	Includes fluid couplings and magnetic couplings. Utilize electrical VFD designation for variable frequency drives.

Examples:

P-G261.MTR	The motor associated with P-G261.
CMP-M502.LOP	The lube oil pump associated with compressor CMP-M502.
CHLR-M621.CMP-1	Compressor 1 of chiller CHLR-M621.

5 PIPING AND DUCT

5.1 Pipe and Duct Designation

The identification format for piping and ductwork is as follows.

P	**-**	**CCC**	**-**	**MMNN**	**-**	**SNN**	**-**	**LLLL**
Pipe Nominal Size	-	Fluid Commodity Code	-	Pipe Specification Code (Optional)	-	Insulation Specification Code (Optional)	-	Line Number (Optional)

Where,

P	is the nominal pipe size in millimetres, and may be from 1 to 4 digits. See Table 5-1. For rectangular conduits and ducts, express the size as width x height. See example below.
CCC	is the *Fluid Commodity Code*, which is 2 to 4 characters from Section 5.1.2.
MMNN	is the optional *Pipe Specification Code*, where MM is the material from Table 5-3, and NN is a number referencing the specific specification. Note that MM must be letters. See Notes 1 and 2.
SNN	is the optional *Pipe Specification Code*, where S is the insulation material / type from Table 5-4, and NN is a number indicating the thickness of the insulation in mm. Note that S must be a letter.
LLLL	is the optional *Line Number*. The *Line Number* must be unique across the entire facility, for each *Fluid Commodity Code*. See Note 3.

Note:

1. *It is recommended that a common set of pipe specifications be developed for each type of facility.*
2. *For existing facilities, where the exact pipe specification is not known, the Pipe Specification Code may be omitted.*
3. *It is not expected that Line Numbers will be utilized on all projects. Coordinate with the City project manager for specific requirements regarding the applicability of Line Numbers.*
4. *The Fluid Commodity Code together with the Line Number must be unique across the facility, where Line Numbers are utilized.*

Examples:

150-PW-CS11	A 150mm (6”) potable water pipe, with specification code CS11. No line numbers utilized.
600-RAS	A 600mm (24”) Return Activated Sludge pipe, with an unknown pipe specification and no line number.
600x1200-SE	A 600 x 1200mm secondary effluent conduit. The pipe/conduit specification and line number are not specified.
25-CLG-SS31-1151	A 25mm (1”) chlorine gas pipe, with pipe specification SS31, and line number 1151.

400-RW-CS52-1151	A 400mm (16”) chlorine gas pipe, with pipe specification SS31, and line number 1151. Note that this could be in the same facility as piping 25-CLG-SS31-1151.
1350-TRW-040	A 1350mm diameter treated water pipe. The pipe specification code is omitted. The line number code 040 is differentiated from the pipe specification code in that it does not begin with a letter.

5.1.1 Nominal Pipe Sizes

Table 5-1 : Nominal Pipe Sizes (Metric)

mm	Inches	mm	Inches	mm	Inches	mm	Inches
6	1/8	**80**	3	**275**	11	**750**	30
8	¼	**90**	3 ½	**300**	12	**800**	32
10	3/8	**100**	4	**350**	14	**850**	34
15	½	**112**	4 ½	**400**	16	**900**	36
20	¾	**125**	5	**450**	18	**950**	38
25	1	**150**	6	**500**	20	**1000**	40
32	1 ¼	**175**	7	**550**	22	**1100**	44
40	1 ½	**200**	8	**600**	24	**1200**	48
50	2	**225**	9	**650**	26	**1300**	52
65	2 ½	**250**	10	**700**	28	**1400**	56

5.1.2 Fluid Commodity Codes

Table 5-2 : Fluid Commodity Code Designations

Code	Commodity - Water	Commodity - Wastewater
AA	Aqua Ammonia	
AHP	Air, High Pressure	Air, High Pressure
ALP	Air, Low Pressure	Air, Low Pressure
AS	Air Scour	
BLS		Ballasted Sludge
BS	Brine Solution	
BSD		Biosolids, Dewatered
BSL		Biosolids, Liquid
BWS	Backwash Supply	
BWW	Backwash Wastewater	
CA	Compressed Air	Compressed Air
CCW	Circulating Cooling Water	
CDR	Condenser Water Return	Condenser Water Return
CDS	Condenser Water Supply	Condenser Water Supply
CE		Centrate
CEF		Centrate - Final
CEI		Centrate - Intermediate
CG		Calibration Gas
CHR	Chilled Water Return	Chilled Water Return
CHS	Chilled Water Supply	Chilled Water Supply
CL2	Chlorine	Chlorine
CLG	Chlorine Gas	
CLS	Chlorine Solution	
CO2	Carbon Dioxide	Carbon Dioxide
CON		Condensate (including Digester Gas Condensate)
CRW	Clarified Discharge Water	
CS	Caustic (Sodium Hydroxide)	Combined Sewer
CWR	Cooling Water Return	Cooling Water Return
CWS	Cooling Water Supply	Cooling Water Supply
D	Drain	Obsolete (was Drain non-process) Use SAN or LDS
DCW	Domestic Cold Water	(use PW)
DD	Deacon Effluent (Post UV)	
DDW	Demineralized Water	

Code	Commodity - Water	Commodity - Wastewater
DEA	Dilute Acid	
DEC	Dilute Caustic	
DF	DAF Float	
DG		Digester Gas
DGC		Digester Gas - Conditioned
DGH		Digester Gas, High Pressure
DFR	Diesel Fuel Return	Diesel Fuel Return
DFS	Diesel Fuel Supply	Diesel Fuel Supply
DHR	Domestic Hot Water Return	Domestic Hot Water Return
DHW	Domestic Hot Water	Domestic Hot Water
DL		Decant Liquor
DP		Dry Polymer
DRA	Drainage (Floors)	
DRN	Drains (Clean Drains)	
DRS	Subdrain	
DS	Deacon Suction	Digester Sludge
DSW	Distilled Water	
DU	Deacon UV (Pre UV)	
EA		Exhaust Air
EE	Engine Exhaust	
ES	Electric Supply	Electric Supply
EXP	Expansion Tank Equalizer Line	
FC	Ferric Chloride	Ferric Chloride
FE		Final Effluent
FED	Filter Media Eduction	
FIN	Filter Influent	
FIR	Firewater	
FLT		Filtrate
FOA		Foul Air
FOR	Fuel Oil Return	
FOS	Fuel Oil Supply	
FOV	Fuel Oil Vent	
FPG	Fire Protection Glycol Solution	Fire Protection Glycol Solution
FPW	Fire Protection Water	Fire Protection Water
FSF		Fermented Sludge Filtrate
FSL		Fermenter Sludge
FSU		Fermenter Supernatant
FSW		Flushing Water

Code	Commodity - Water	Commodity - Wastewater
		(Plant Effluent Water)
FTR	Filter To Recycle	
FW	Filtered Water	
GE		Grit Effluent
GOX	Gaseous Oxygen	
GR	Glycol Return	Glycol Return
GRS		Grit Slurry
GRT		Grit (Solids / Dewatered)
GS	Glycol Supply	Glycol Supply
HCO	Hydraulic Oil	Hydraulic Oil
HFS	Hydrofluosilicic Acid	
HFW		Hot Flushing Water
HP	Hydrogen Peroxide	
HPS	High Pressure Steam	
HR	High Pressure Condensate	
HRE		High-Rate clarifier Effluent
HRS		High-Rate clarifier Sludge
HST	12% Hypochlorite Solution	
HWS		Hot Water Supply
HWR		Hot Water Return
H2		Hydrogen
HYP	0.8% Hypochlorite Solution	
IAS	Instrument Air Supply	Instrument Air Supply
LCP		Liquid Concentrated Polymer
LDS		Land Drainage Sewer
LGO	Lubricating Oil	Lubricating Oil
LOX	Liquid Oxygen	Liquid Oxygen
LPC	Low Pressure Condensate	
LPS	Low Pressure Steam	Low Pressure Steam
MA		Mixed Air
MC		Magnesium Chloride
MET		Methanol
ML		Mixed Liquor
MP		Mixed Polymer
MPC	Medium Pressure Condensate	
MPS	Medium Pressure Steam	
MU	Make-Up Water	
N2		Nitrogen Gas

Code	Commodity - Water	Commodity - Wastewater
N2L		Nitrogen Liquid
NG	Natural Gas	Natural Gas
NPH		Non-Potable Water - Hot
NPT		Non-Potable Water - Tempered
NPW		Non-Potable Water (Potable Water segregated by backflow preventer and for general use such as hose bibs and pump seals)
OA		Outdoor Air
O2		Oxygen Gas
OF	Overflow	
OZG	Ozone Off Gas	
OZO	Ozonated Oxygen	
OZW	Ozonated Water	
PRO	Propane	
PC	Pumped Condensate	
PD		Process Drain
PE		Primary Effluent
PEF	Phosphate Feed	
PLD	Dry Polymer	
PLS	Polymer Solution	
PO		Process Overflow
PS		Primary Sludge
PSW	Plant Service Water	
PV		Process Vent
PW	Potable Water	Potable Water
R	Refrigerant	Refrigerant
RA		Return Air
RAS		Return Activated Sludge
RD	Roof Drain	
RS		Raw Sewage
RW	Raw Water	Rain/Roof Water
RWL	Rain Water Leader	
SA		Supply Air
SAM	Sample	Sample
SAN	Sanitary Drainage	Sanitary Drainage
SBS	Sodium Bisulphite	Sodium Bisulphite
SC		Scum

Code	Commodity - Water	Commodity - Wastewater
SCA	Sulphuric Acid	
SCB		Sodium Carbonate (Soda Ash)
SCD		Scum - Dewatered
SCP		Scum - Primary
SCRS		Screened Raw Sewage
SCS		Screenings
SDR	Saturated Recycle Water	
SE		Secondary Effluent
SEA		Service Air
SHC	Sodium Hypochlorite	Sodium Hypochlorite
SHD		Sodium Hydroxide
SLC		Sludge Cake
SLH		Sludge – Hauled
SLI		Sludge - Dewatered
SLO	Seal Oil	
SLP		Sludge – Phosphorus Released
SLS		Sludge - Screened
SLU	Sludge	
SND		Sand (solid)
SNS		Sand Slurry
SPD	Sump Pump Discharge	Obsolete (was Sump Pump Discharge) Use SAN or LDS.
SRS		Storm Relief Sewer
SSC		Scum - Secondary
STD	Salt Dry	
STS		South End Thickened Sludge
SUB		DAF Subnatant
SUP	Supernatant	
SVT		Struvite
SW	Seal Water	Seal Water (only used for separately derived systems. Typically NPW is utilized for seal use).
SWD	Stormwater Drainage	
TBS		Thickened Bottom Sludge
TCE		Treated Centrate
TDW	Tempered Domestic Water	Tempered Domestic Water
TFS		Thickened Fermented Sludge

Code	Commodity - Water	Commodity - Wastewater
TO		Thermal Oxidizer
TRW	Treated Water	
TS		Thin Sludge
TW	Tempered Water	
TWAS		Thickened Waste Activated Sludge
VAC	Vacuum	Vacuum
VTA	Vent To Atmosphere	Vent to Atmosphere
W		Water
WA		Waste Air
WAS		Waste Activated Sludge
WS	Softened Water	
WSF		Waste Activated Sludge Filtrate
WWS		Wastewater Sewer

5.1.3 Piping Material

Table 5-3 : Piping and Tubing Material

Designation	Description
AL	Aluminum and Alloys
BA	Aluminum Bronze
GS	Galvanized Carbon Steel
CS	Carbon Steel
CU	Copper
DI	Ductile Iron
FP	Fiberglass Reinforced Plastic
KB	Concrete
PA	ABS (Acrylonitrile-butadiene styrene)
PD	HDPE (High Density Polyethylene)
PF	PFA (Perfluoroalkoxy)
PK	PVDF (Polyvinylidene Fluoride, i.e. Kynar®)
PP	PP (Polypropylene)
PV	PVC (Polyvinyl Chloride)
SS	Stainless Steel

5.1.4 Insulation Material / Type

Table 5-4 : Insulation Material / Type

Designation	Description
E	Elastomeric - flexible pipe insulation, closed cell structure (ASTM C534)
F	Fibreglass, UL-rated, preformed, sectional rigid with factory applied, Kraft paper with aluminum foil vapor barrier jacket
G	Cellular glass.
M	Mineral fibre (ASTM C553).
S	Calcium Silicate (ASTM C533)

5.2 Piping and Duct Components

5.2.1 Manual Valve Identifier Format – Minor Valves

The identification format for minor manual valves (and dampers), without instrumentation, is as follows.

FFFF	**-**	**HV**	**-**	**A**	**NN(N)(N)**	**S**
Facility Code (Optional)	-	Manual Valve Designation	-	Area Code	Equipment Number	Suffix

Where,

FFFF	is the *Facility Code*, from Appendix A. The *Facility Code* will typically be implied, and would only be fully written where required.
HV	is the Manual Valve Designation.
A	is the *Area Code*, which is based on Section 2.3.
NN(N)(N)	is the *Equipment Number* of the associated equipment. If no equipment is associated, allocate an *Equipment Number* specific for the applicable valve or group of valves.
S	is the *Suffix*, a single letter to designate the specific valve. Always apply a suffix, regardless if there are one or more valves with the same equipment number. Where there are insufficient letters (A-Z), double letters may be utilized (AA through ZZ). The requirement to utilize double letters should be rare.

Notes:

1. *Manual valves, check valves, and strainers may utilize common equipment numbers and suffixes. For example, it is acceptable to have a HV-G638A and a CV-G638A.*
2. *Large valves and controlled valves will be identified via the instrumentation standard identified in Section 7.1.*
3. *Typically, significant valves not associated with a specific piece of equipment would be identified as per Section 5.2.2, however the designers discretion may be applied.*

Examples:

HV-G201A	A manual valve in the G area, associated with pump P-G201.
HV-M645B	A manual valve in the M area.
HV-R102A	A manual valve in the R area.

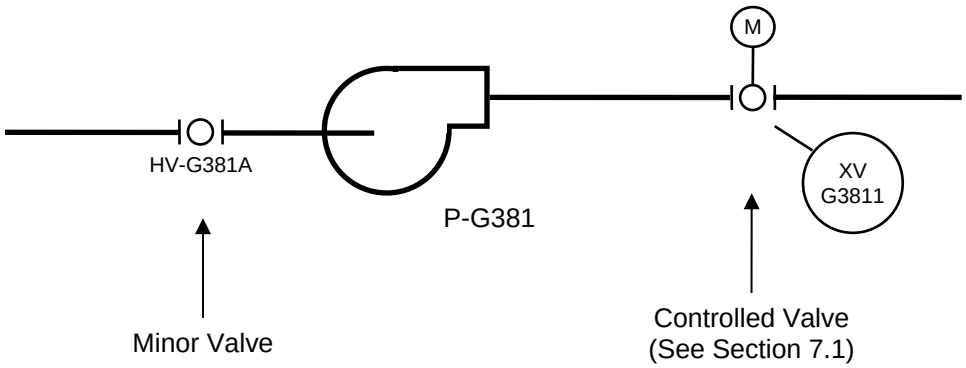

Figure 5-1 : Valve Identification

5.2.2 Manual Valve Identifier Format – Major Valves and Valves with Instrumentation

The identification format for major valves (and dampers) and any manual valve (and damper) with instrumentation, is based upon the instrumentation standard identified in Section 7.1. The format of the identifier is as follows.

FFFF	**-**	**HV**	**-**	**A**	**NN(N)(N)**	**T**
Facility Code (Optional)	-	Manual Valve Designation	-	Area Code	Equipment Number	Instrument Number
					Loop Number	

Where,

FFFF	is the *Facility Code*, from Appendix A. The *Facility Code* will typically be implied, and would only be fully written where required.
HV	is the Manual Valve Designation.
A	is the *Area Code*, which is based on Section 2.3.
NN(N)(N)	is the *Equipment Number* of the associated equipment. If no equipment is associated, allocate an *Equipment Number* specific for the applicable valve or group of valves.
T	is the *Instrument Number*, where the number increments from the number 1 through 9. Use of the number 0 should be infrequent, reserved for special instruments or those where the instrument ending with 0 is a common instrument that serves other instruments.
NN(N)(N)T	is the Loop Number, comprised of the *Equipment Number* together with the *Instrument Number*.

Examples:

HV-G2011	A manual valve in the G area, associated with pump P-G201, and contains open and closed limit switches.
HV-M6451	A manual valve in the M area, with a position transmitter.
HV-R1022	A manual valve in the R area, with a limit switch.
UT-S1510	A multi-variable transmitter that connects to multiple sensors from various loops. Note the use of the 0 for the Instrument Number for this special case where it is handling multiple loops.

5.2.3 Manual Valve Identifier Format – Instrumentation Isolation and Bypass Valves

The identification format for minor instrumentation isolation and bypass valves, is as follows. Identification of simple, small isolation valves (i.e. gauge pressure transmitter) is not mandatory.

FFFF	**-**	**HV**	**-**	**A**	**NN(N)(N)**	**T**	**S**
Facility Code (Optional)	-	Manual Valve Designation	-	Area Code	Equipment Number	Instrument Number	Suffix
					Loop Number		

Where,

FFFF	is the *Facility Code*, from Appendix A. The *Facility Code* will typically be implied, and would only be fully written where required.
HV	is the Manual Valve Designation.
A	is the *Area Code*, which is based on Section 2.3.
NN(N)(N)	is the *Equipment Number* of the associated equipment.
T	is the *Instrument Number*, where the number increments from the number 1 through 9. Use of the number 0 should be infrequent, except for special instruments, or those where the instrument ending with 0 is a common instrument that serves other instruments.
NN(N)(N)T	is the Loop Number, comprised of the *Equipment Number* together with the *Instrument Number*.
S	is the *Suffix*, a single letter to designate the specific valve. Always apply a suffix, regardless if there are one or more valves with the same equipment number. Where there are insufficient letters (A-Z), double letters may be utilized (AA through ZZ). The requirement to utilize double letters should be rare.

Notes:

1. *The Loop Number will typically be the nearest associated instrument. In some cases, Loop Numbers may be designated for allocation of manual valves.*

5.2.4 Miscellaneous Piping Equipment Identifier Format

Miscellaneous piping equipment, which includes the following:

- Balancing Valves (Manual and Automatic)
- Check Valves
- Strainers
- Pressure Regulators (Pressure Control Valves)
- Pressure Safety Valves
- Stop Logs

are to be identified as follows:

FFFF	**-**	**EEE**	**-**	**A**	**NN(N)(N)**	**S**
Facility Code (Optional)	-	Equipment Functional Designation	-	Area Code	Equipment Number	Suffix

Where,

FFFF	is the *Facility Code*, from Appendix A. The *Facility Code* will typically be implied, and would only be fully written where required.
EEE	is the *Equipment Functional Designation*, which is comprised of 2 to 4 characters from Section 4.2.
A	is the *Area Code*, which is based on Section 2.3.
NN(N)(N)	is the *Equipment Number* of the associated equipment.
S	is the *Suffix*, a single letter to designate the specific valve.

Notes:

1. *The Equipment Number will typically be the nearest associated equipment. In some cases, Equipment Numbers may be designated for allocation of miscellaneous piping equipment.*
2. *Miscellaneous Piping Manual valves, check valves, and strainers may utilize common equipment numbers and suffixes. For example, it is acceptable to have a HV-G638A and a CV-G638A.*
3. *Miscellaneous equipment with significant instrumentation will be identified via the instrumentation standard identified in Section 7.1.*

Examples:

BVA-K302B	An automatic balancing valve in the K area.
CV-G201A	A check valve in the G area, associated with pump P-G201.
CV-M645B	A check valve in the M area.
STR-R102A	A strainer in the R area.
SL-K151A	A stop log in the K area.

5.2.5 Miscellaneous Ducting Equipment Identifier Format

Miscellaneous duct equipment, which includes the following:

- Balancing Dampers (Manual and Automatic),
- Back-draft Dampers,
- Fire Dampers, and
- Smoke Dampers

are to be identified as follows:

FFFF	**-**	**EEE**	**-**	**A**	**NN(N)(N)**	**S**
Facility Code (Optional)	-	Equipment Functional Designation	-	Area Code	Equipment Number	Suffix

Where,

FFFF	is the *Facility Code*, from Appendix A. The *Facility Code* will typically be implied, and would only be fully written where required.
EEE	is the *Equipment Functional Designation*, which is comprised of 2 to 4 characters from Section 4.2.
A	is the *Area Code*, which is based on Section 2.3.
NN(N)(N)	is the *Equipment Number* of the associated equipment.
S	is the *Suffix*, a single letter to designate the specific valve.

Notes:

1. *The Equipment Number will typically be the nearest associated equipment. In some cases, Equipment Numbers may be designated for allocation of miscellaneous ducting equipment.*
2. *Balancing dampers, backdraft dampers, and fire dampers may utilize common equipment numbers and suffixes. For example, it is acceptable to have a BD-G638A and a BDD-G638A.*
3. *Where balancing dampers are integrated with the grille / diffuser, identify as the grille / diffuser (i.e. GRD-M645-1).*
4. *Miscellaneous ducting equipment with significant instrumentation will be identified via the instrumentation standard identified in Section 7.1.*

Examples:

BD-K602B	The second balancing damper in the K area associated with AHU-K602.
BDD-G601A	A back-draft damper in the G area, associated with air handling unit AHU-G601.
FD-M645B	The second fire damper in the M area associated with AHU-M645.
SD-M645D	The fourth smoke damper in the M area associated with AHU-M645.

5.2.6 Cathodic Protection Components

The identification of cathodic protection system elements is to be developed at a later date.

5.2.7 Sample P&ID

See Figure 5-2 for a sample P&ID segment depicting the identification of manual valves, check valves, and strainers.

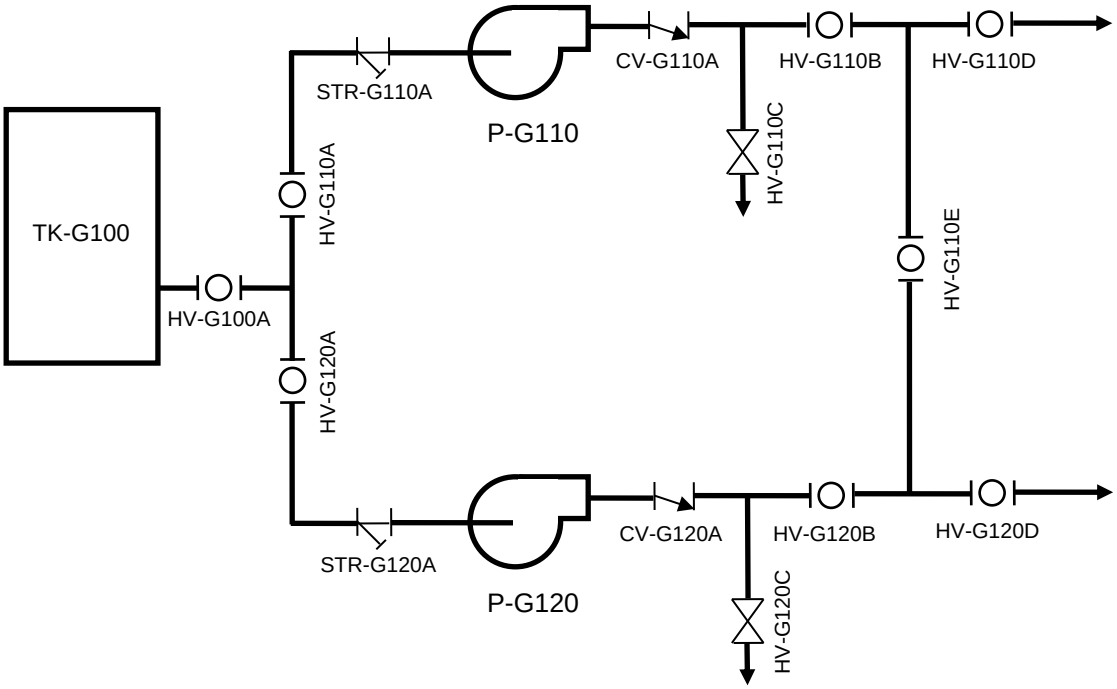

Note: All devices above have an implied facility code prefix of 0102- (or similar).

Figure 5-2 : Sample P&ID – Manual Valve, Strainer, and Check Valve Indication

This page is intentionally blank.

6 ELECTRICAL

6.1 Equipment Identifier Format

The identification format for electrical equipment is as follows.

FFFF	**-**	**EEEE**	**-**	**A**	**NN(N)(N)**	**T**	**-**	**S**
Facility Code (Optional)	-	Equipment Functional Designation	-	Area Code	Equipment Number	Type Modifier (Optional)	-	Suffix (Optional)

Where,

FFFF	is the *Facility Code*, from Appendix A. The *Facility Code* will typically be implied, and would only be fully written where required.
EEEE	is the *Equipment Functional Designation*, which is comprised of 2 to 4 characters from Section 6.2.
A	is the *Area Code*, which is based on Section 2.3.
NN(N)(N)	is the *Equipment Number*. Select numbers consistent with the ranges in Appendix D.
T	is the Type Modifier, an optional field that is utilized to designate essential or UPS powered equipment. See Section 6.3.
S	is the Suffix, an optional numeric or letter code to distinguish between multiple pieces of equipment with a common equipment number. Generally, numbers are utilized for equipment in series, and letters for equipment in parallel.

Examples:

0101-MCC-M7210	A MCC located in the M area of the NEWPCC facility.
DS-G510	A disconnect switch for pump P-G510.
CB-M023-B	The second (alternate) breaker feeding PNL-M023.
PNL-S025E	Essential power panelboard located in the S area.
XFMR-H711	Transformer within a regional water pumping station.
MCC-L71	MCC within a wastewater lift station (Note the two digit equipment number)

6.2 Electrical Functional Designations

Table 6-1 : Electrical Equipment Functional Designations

Functional Designation	Description	Notes
ATS	Automatic Transfer Switch	
BAT	Battery	
BC	Battery Charger	
BUS	Busway	
C	Cable (Power)	
CAP	Capacitor	Typically individual unit. See PFC.
CB	Circuit Breaker	Includes air, vacuum, SF6, and moulded case circuit breakers
CBUS	Cable Bus	
CON	Contactor	
CP	Control Panel	Includes miscellaneous electrical control panels, such as a heat trace control panel.
CPR	Cathodic Protection Rectifier	
CSTE	Customer Service Termination Equipment	
DP	Distribution Panel	Typically 600V panel, for distributing power to other points of the electrical distribution system.
DS	Disconnect Switch (non-fusible)	
EDP	Electrical Device Panel	Use for metering panels, protection panels and other miscellaneous electrical panels.
ELB	Emergency Lighting Battery Pack	May have integrated lights.
FAAP	Fire Alarm Annunciator Panel	
FACP	Fire Alarm Control Panel	
FAS	Fire Alarm System	
FDS	Fusible Disconnect Switch	
FU	Fuse	
GEN	Generator	
HCC	Heater Coil Controller	Includes SCR and contactor based controllers.
HF	Harmonic Filter	
INV	Inverter	
JB	Junction Box	

Functional Designation	Description	Notes
K	Interlocking Key (Kirk Key)	See Section 6.4.5
LC	Lighting Contactor	A lighting control panelboard would be identified as a PNL..
LDB	Load Bank	
MCC	Motor Control Centre	
MCP	Motor Circuit Protector	
MCS	Moulded Case Switch	
MMS	Manual Motor Starter	
MS	Motor Starter	
MSP	Motor Starter Panel	
MTR	Motor	
MTS	Manual Transfer Switch	
NGR	Neutral Grounding Resistor	
PB	Pull Box	
PFC	Power Factor Correction Unit	
PM	Power Meter	
PNL	Panelboard	
PS	Power Supply	24VDC power supply
PSP	Power Supply Panel	Panel containing 24VDC power supplies, fire alarm booster power supply.
RCFR	Rectifier	
RCPT	Receptacle	
RCTR	Reactor	Includes VFD line and load reactors.
RLY	Protection Relay	
~~SCR~~	~~Silicon Controlled Rectifier~~	Utilize RCFR
SGR	Switchgear	
SPL	Splitter	
SS	Soft Starter	
SW	Switch	
TVSS	Transient Voltage Surge Suppressor	
UPS	Uninterruptible Power Supply	
VFD	Variable Frequency Drive	
XFMR	Transformer	

6.3 Type Modifier

Electrical equipment that is deemed critical to the operation of a facility is typically backed up by one or more generators or some form of uninterruptible power supply. Electrical equipment of this nature is to be identified with a type modifier to provide indication that the equipment is critical in nature.

The following type modifiers will be used on electrical equipment based on the type of backup power system it is supplied by:

Type Modifier	Description
E	Essential – Distribution is deemed to be of higher criticality and is typically backed up by a generator, or at minimum has a transfer switch between multiple sources.
U	Uninterruptible – The distribution equipment is powered by a UPS

Notes:

1. *The Type Modifier is utilized only for essential and uninterruptible power systems.*
2. *The Type Modifier is not to be used on generators or UPS units as these devices are the sources of the backup power supply.*

6.4 Device-Specific Identifier Formats

6.4.1 Receptacle Identifiers

Receptacles are not necessarily required to be uniquely identified, but where they are, the receptacle identification is as follows.

RCPT	**-**	**A**	**NN(N)(N)**	**-**	**KK**	**S**	**-**	**MM**
Receptacle Designation	-	Area Code	Equipment Number of Source Panel	-	Circuit Number	Switched Sub-Circuit (Optional)	-	Incrementing Number (Optional)

Where,

RCPT	is the receptacle designation.
A	is the *Area Code*, which is based on Section 2.3.
NN(N)(N)	is the *Equipment Number* of the source panel.
KK	is the *Circuit Number* of the source panel. Where circuit numbers are not applicable, utilize an incrementing number beginning with 1.
S	is the optional *Switched Sub-Circuit* utilized to identify cables that are switched.
MM	is an optional *Incrementing Number*, utilized to indicate the specific receptacle powered by the circuit.

Examples:

RCPT-S022-14-2	A uniquely identified receptacle fed from Circuit 14 of PNL-S022. In this case, it is the 2nd receptacle on the circuit.
RCPT-M701-1	A uniquely identified receptacle fed from MCC-M701. In this case, it is the only receptacle on the circuit, and as circuit numbers are not typically applied to MCCs, the number 1 is assigned to the circuit number.

The RCPT designation may be implied on plan drawings, as shown in Figure 6-1 below.

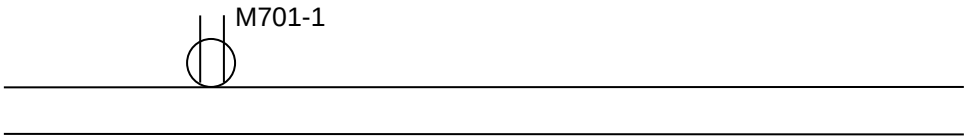

Figure 6-1 : Receptacle Identification on Plan Drawings

6.4.2 Power Cables Associated with Identified Equipment

The identification format for power cables is as follows.

C	**-**	**A**	**NN(N)(N)**	**-**	**S**
Cable Designation	-	Area Code	Equipment Number of Load	-	Suffix (Optional)

Where,

C — is the Cable Designation. For power cables, the letter C is utilized. For busway, BUS is utilized.

A — is the *Area Code*, which is based on Section 2.3.

NN(N)(N) — is the *Equipment Number* of the load equipment.

S — is the *Suffix* utilized to identify the specific cable associated with the equipment. The Suffix is not required if a single cable is associated with the equipment. Utilize sequential numbers for cables in series, or for different purposes, and letters for cables in parallel. Utilize the letter T to designate tie connections. Where the load equipment identifier has a suffix in the identifier, set the suffix of the cable to be the suffix of the load identifier plus an additional digit (See receptacle example below)

Notes:

1. *In the event the cable does not serve a specific load, such as a tie cable between two MCCs, select one of the two units of equipment as the prime equipment number for the cable.*
2. *See Section 7.3 for automation cable identification.*

Examples:

C-G683-1	The feeder for a motor disconnect, DS-G683.
C-G683-2	The motor cable feeding exhaust fan EF-G683, and fed from disconnect switch DS-G683.
C-M002	The feeder for MCC-M002
C-M003-A	The normal power feeder to ATS-M003.
C-M003-B	The emergency power feeder to ATS-M003.
C-M001-T	A cable used as a tie between MCC-M001 and DP-M002.
C-L01	Cable feeding Lift Pump P-L01 in a wastewater lift station.
C-M710-21	The cable feeding receptacle RCPT-M710-2.

6.4.3 General Purpose Cables – Lighting & Receptacles

The identification format for general purpose cables, for single phase loads, is as follows.

C	**-**	**P**	**NN(N)(N)**	**-**	**KK**	**S**
Cable Designation	-	Area Code	Equipment Number of Source Panel	-	Circuit Number	Switched Sub-Circuit (Optional)

Where,

C	is the Cable Designation.
A	is the *Area Code*, which is based on Section 2.3.
NN(N)(N)	is the *Equipment Number* of the source panel.
KK	is the *Circuit Number* of the source panel
S	is the optional *Switched Sub-Circuit* utilized to identify cables that are switched.

Note:

1. It is expected that three-phase loads will all have equipment numbers assigned.

Examples:

C-S022-14	Circuit 14 of PNL-S022.
C-S022-14A	Switched sub-circuit of circuit 14, fed from PNL-S022.

6.4.4 Junction Boxes - Power

The identification format for power junction boxes is as follows.

JB	**-**	**A**	**NN(N)(N)**	**T**	**-**	**S**
Junction Box Designation	-	Area Code	Equipment Number	Circuit Number	-	Suffix (Optional)

Where,

JB	is the Junction Box designation.
A	is the *Area Code*, which is based on Section 2.3.
NN(N)(N)	is the *Equipment Number* of the load equipment. If not associated with a specific piece of equipment, use a unique *Equipment Number* in the electrical equipment range, not associated with other equipment, in accordance with the *Equipment Number* ranges in Appendix D.
T	is the *Type Modifier*, optional to electrical equipment as per Section 6.3.
S	is the *Suffix* utilized to identify multiple junction boxes associated with an equipment number.

Examples:

JB-U421	Junction box associated with pump P-U421.
JB-C001	Junction box associated with MCC-C001.
JB-R600	Junction Box associated with numerous pieces of equipment, within a wastewater treatment facility.
JB-M751	Junction Box associated with numerous pieces of equipment, within a regional water pumping station.

6.4.5 Interlock Keys

The identification format for interlock (Kirk) keys is as follows.

K	**NNNN**
Interlocking Key Designation	Number

Where,

K — is the *Interlocking Key* designation.

NNNN — is the *Key Interchange Number*, which is unique for each facility. The *Key Interchange Number* can be from 1 to 4 digits long. For larger facilities, a drawing should be created with an index of Key Interchange Numbers for reference.

Note:

1. *The interlock key identifier will be the same for all interlocks associated with the system. Thus, for a system with four breakers interlocked with four locks and three keys, all four interlocks and keys have the same identifier.*
2. *Area Codes are not utilized as key interlocks could span over multiple areas.*

Example:

K1 — First key interlock system for a facility.

K52 — 52nd key interlock system associated with a facility.

6.4.6 Wire Tags

6.4.6.1 Lighting and Receptacle Circuits - AC

The identification format for lighting and receptacle circuits is as follows.

A	**NN(N)(N)**	**-**	**CC**	**S**
Area Code	Equipment Number of Source	-	Circuit Number or Neutral Designation	Switched Sub-Circuit (Optional)

Where,

A	is the *Area Code*, which is based on Section 2.3.
NN(N)(N)	is the *Equipment Number* of the source panelboard.
CC	is the *Circuit Number* of the source panelboard, or N for a neutral wire.
S	is the *Switched Sub-Circuit Designation*, and is an incrementing letter for a conductor that is switched.

Note: The Equipment Functional Designation, typically PNL, is implied to reduce the length of the wire tags.

Examples:

G701-32	Line (Hot) conductor of circuit 32, associated with PNL-G701.
W752-N	Neutral conductor associated with PNL-W752.
S702-12B	The second switched sub-circuit line (hot) conductor, associated with PNL-S702 circuit 12.

6.4.6.2 DC Power Circuits

DC power circuits, such as from large switchgear DC power supply units require unique identification as follows:

P	NN(N)(N)	-	C	S	D
Area Code	Equipment Number of Source	-	Circuit Number	Switched Sub-Circuit (Optional)	Power Designation

Where,

A	is the *Area Code*, which is based on Section 2.3.
NN(N)(N)	is the *Equipment Number* of the source panelboard.
C	is the *Circuit Number* of the source panelboard.
S	is the *Switched Sub-Circuit Designation*, and is an incrementing letter for a conductor that is switched.
D	is the *Power Designation*, which is based on Table 6-2.

Note: The Equipment Functional Designation, typically PNL, is implied to reduce the length of the wire tags.

Table 6-2 : DC Power Circuit Wire Tag Power Designations

Power Designation	Description
C	DC Common (0V)
G	Ground
+	DC Positive
-	DC Negative

Note: The Ground designation is not typically required, provided that the ground wire is green.

Examples:

G751-22+	Positive wire of circuit 22, fed from PNL-G751.
G751-22-	Negative wire of circuit 22, fed from PNL-G751.
G751-22A+	Positive wire of switched circuit 22, fed from PNL-G751.

6.4.6.3 Three Phase Power Wiring

The identification format for three phase power wire tags is as follows.

A	**NN(N)(N)**	**-**	**X**	**H**
Area Code	Equipment Number	-	Sequence Number (Optional)	Phase

Where,

A — is the *Area Code*, which is based on Section 2.3.

NN(N)(N) — is the *Equipment Number* of the load equipment. If not associated with a specific piece of equipment, use of *Equipment Number* in the electrical range is preferred, in accordance with the *Equipment Number* ranges in Appendix D.

X — is an optional *Sequence Number* that is typically a numeric character, utilized when there are multiple power cables associated with an *Equipment Number*.

H — is the *Phase*, and should be labelled A, B, C, or N.

Three phase power wiring wire tagging is required, except where the conductors are color coding, are in a dedicated cable or conduit, and the routing is obvious.

Examples:

G681-A — Phase A conductor of a power cable associated with EF-G681. The wire is in common conduit with other power cables.

W1511-2B — Phase B conductor of the second power circuit associated with centrifuge CE-W1511 at the NEWPCC facility.

\- — No wire tags are needed for the conductors of a pump, fed via a Teck power cable, where the conductors are color coded and the overall cable is identified and labelled.

6.4.6.4 Motor Control Circuits

The identification format for motor control circuits is as follows:

A	**NN(N)(N)**	**-**	**WWW**	**S**
Area Code (Optional)	Equipment Number (Optional)	-	Wire Number	Suffix (Optional)

Where,

A	is the *Area Code*, which is based on Section 2.3. It is not required for wires exclusively within the motor starter.
NN(N)(N)	is the *Equipment Number* of the associated equipment. It is not required for wires exclusively within the motor starter.
WWW	is the *Wire Number*, an incrementing number.
S	is an optional *Suffix*, and is utilized where it is desired to utilize the same wire number, but the signal has changed.

Notes:

1. *It is desirable, but not mandatory, that the wire number in a motor starter match the terminal number.*
2. *It is deemed acceptable to omit the Area Code and Equipment Number for wires exclusively within the motor starter, as it is common industry practice, and MCC manufacturers only typically provide numeric wire numbers.*

Examples:

8	Control wire 8 located in the motor starter for AHU-G652, and lands on terminal 8 in the motor starter.
8A	Control wire 8A located in the motor starter for AHU-G652, which does not land on a terminal strip.
G652-8	Control wire 8, located in external field wiring, associated with AHU-G652.

6.5 Subcomponents

The following designations are to be utilized for electrical equipment subcomponents. See Section 2.6 for general rules on application of subcomponents. Note that numerous equipment functional designations, shown in Table 6-1, can also be utilized as subcomponent designations, as shown in Table 6-3 below.

Table 6-3 : Electrical Equipment Subcomponents

Subcomponent Designation	Description	Notes
AM	Ammeter	
B	Bus	
CAP	Capacitor	
CB	Circuit Breaker	
CON	Contactor	
CPT	Control Power Transformer	
CR	Control Relay	
CT	Current Transformer	Phase identification may be utilized as part of the subcomponent identifier. i.e. CT-1A, CT-1B
DS	Disconnect Switch	
F	Fan	
FDS	Fused Disconnect Switch	
FU	Fuse	
M	Motor Contactor	
MCB	Main Circuit Breaker	
MCP	Motor Circuit Protector	
MCS	Moulded Case Switch	
MMC	Motor Management Controller	Also known as intelligent overload.
OL	Overload Relay	
PM	Power Meter	
PS	Power Supply	
PT	Potential Transformer	Phase identification may be utilized as part of the subcomponent identifier. i.e. PT-1A, PT-1B
RCFR	Rectifier	
RCTR	Reactor	
RLY	Protection Relay	Utilize IEEE Number for suffix if appropriate.
~~SCR~~	~~Silicone Controlled Rectifier~~	Utilize RCFR
TVSS	Transient Voltage Surge Suppressor	
VM	Voltmeter	

Notes:

1. A motor starter is not typically deemed to be a subcomponent.

Subcomponent Examples:

MS-G261.CAP	A capacitor that is an internal component of MS-G261. If the capacitor were a separate component mounted externally, it would be identified as CAP-G261.
MCC-P011.MCB	Integrated Main Circuit Breaker for Motor Control Centre MCC-P011
MCC-P011.TVSS.CB	Circuit Breaker for Motor Control Centre MCC-P011 TVSS

A sample single line diagram with subcomponents is shown in Figure 6-2. Note that the full identifier is not written out, provided that the parent identifier is clear from the drawing context.

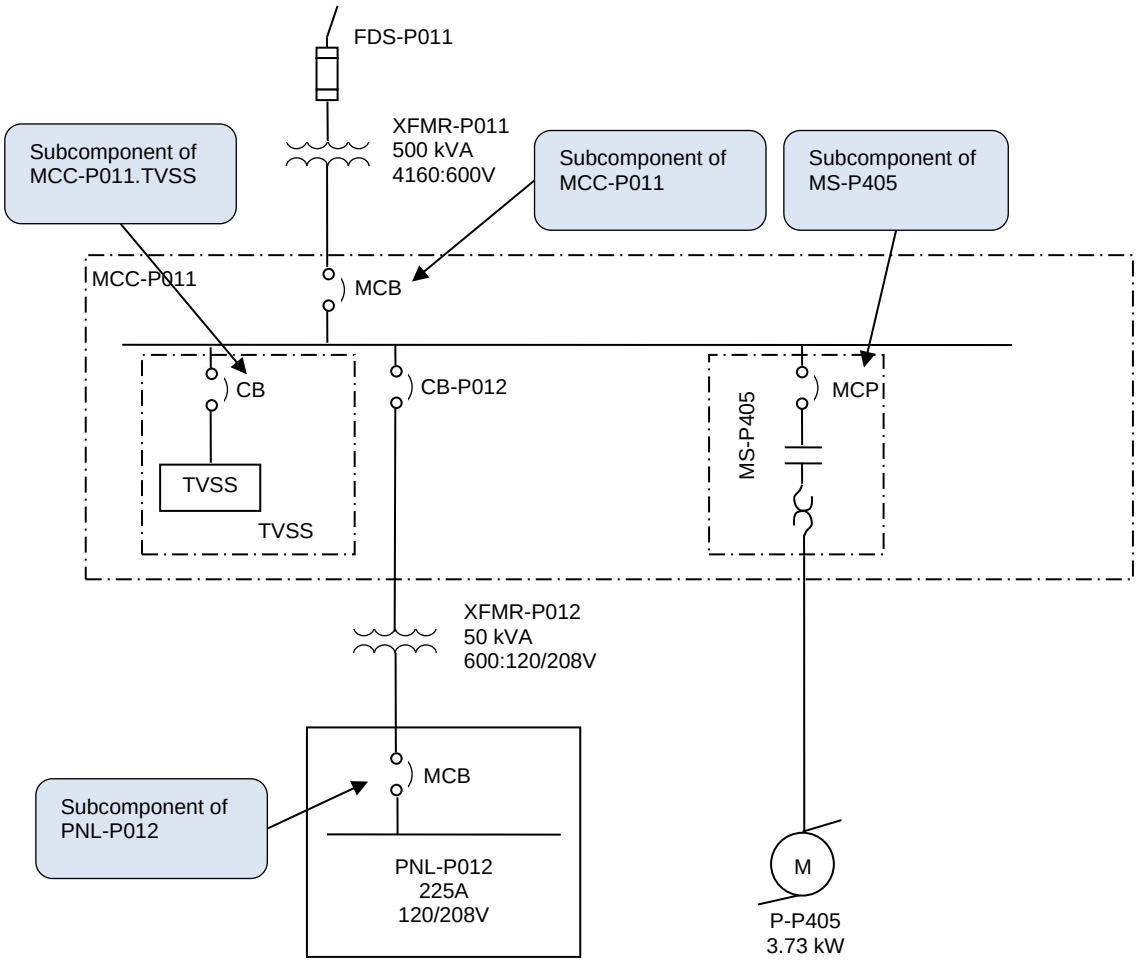

Figure 6-2 : Subcomponents – Electrical Equipment

6.5.1 Tie Circuit Breakers

Tie breakers are used to connect electrical buses together. Tie breakers are considered to be subcomponents of the switchgear / panel that they are located in. The identification format for tie circuit breakers is in accordance with Section 2.6, except that the letter T is used instead of a number for the component number.

Examples:

SGR-U701.CB-T	A tie breaker between SGR-U701 and SGR-U002
SGR-P711.CB-T	A tie breaker between SGR-P711 and SGR-P712

illustrates a sample electrical single line diagram with tie breakers.

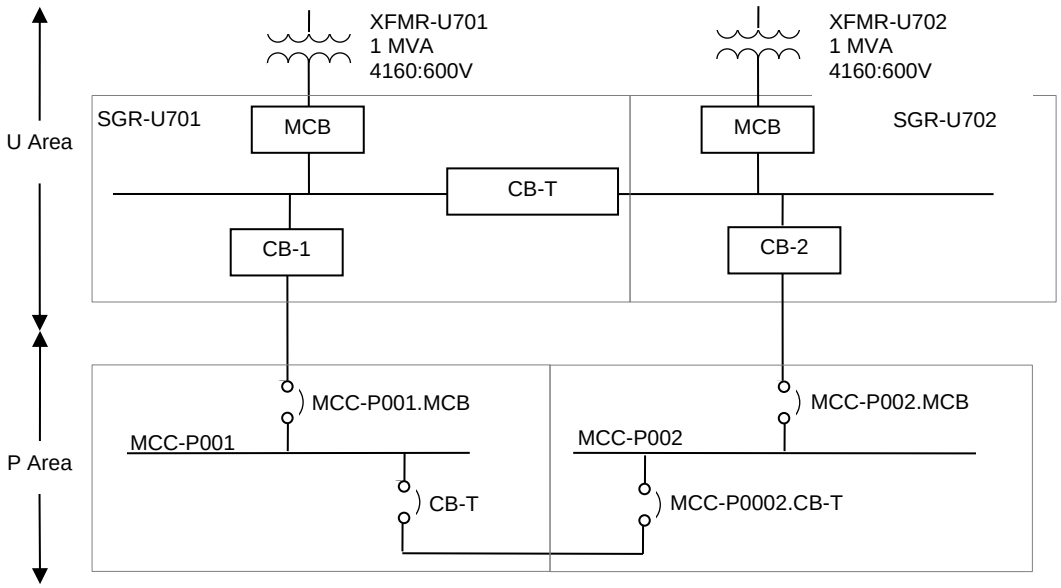

Figure 6-3 : Sample Tie Breaker Identification

Note:

1. All breakers in Figure 6-3, whether specifically shown or not, are subcomponents.

6.6 Examples

6.6.1 Example 1

An example single line diagram is shown in Figure 6-4.

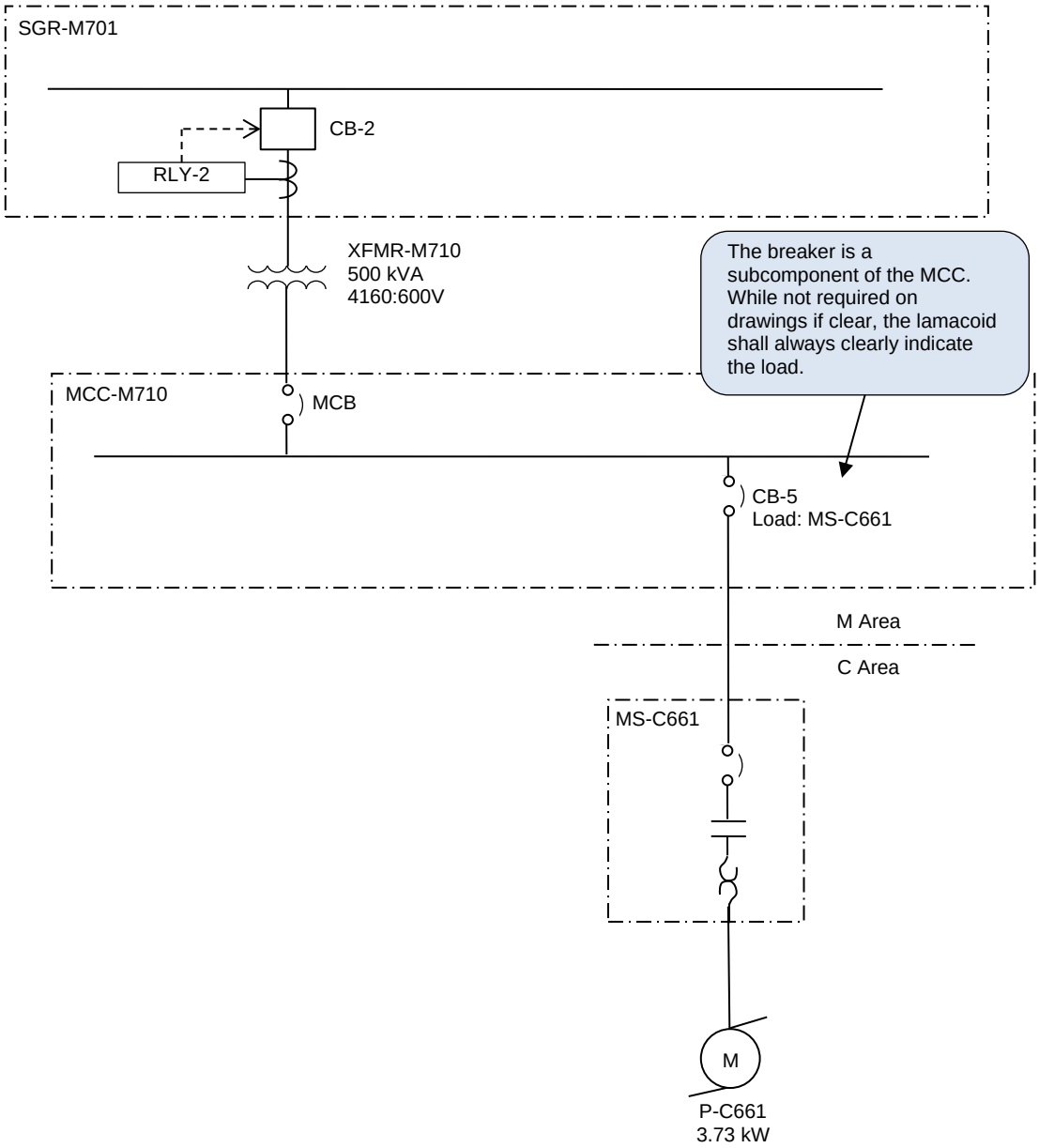

Figure 6-4 : Example Identification by Load Equipment

6.7 Fire Alarm System Devices

6.7.1 Identifier Format

The identification of all fire alarm system components is based upon room numbers rather than equipment numbers. This allows for more rapid recognition of the component location, and avoids utilization of a significant portion of the equipment numbering range for fire alarm system components.

<table>
<tr><th>FFFF</th><th>-</th><th>FAS</th><th>-</th><th colspan="3">A</th><th>L</th><th>RR</th><th>-</th><th>D</th><th>NN</th></tr>
<tr><td rowspan="2">Facility Code (Optional)</td><td rowspan="2">-</td><td rowspan="2">Fire Alarm Design-ation</td><td rowspan="2">-</td><td colspan="3">Area Code</td><td>Level</td><td>Room Number</td><td rowspan="2">-</td><td rowspan="2">Device Designation</td><td rowspan="2">Device Number</td></tr>
<tr><td colspan="7">From Room Number Designation</td></tr>
</table>

Where,

FFFF	is the *Facility Code*, from Appendix A. The *Facility Code* will typically be implied, and would only be fully written where required.
FAS	is the *Fire Alarm Designation*, which is comprised of the letters FAS.
A	is the *Area Code*, which is based on Section 2.3.
L	is the *Level*, which shall typically be one or two characters, as described in Section 3.1.
RR	is the *Room Number*, which shall be assigned as described in Section 3.1.
D	is the Device Designation, which is comprised of a single letter from Section 6.7.2
NN	is the *Device Number*, which uniquely identifies a specific device within a room.

Examples:

FAS-S-115-D01	The first smoke detector in room 15 on the main level of the Secondary Clarifier area.
FAS-M-222-A02	The second horn/strobe in room 22 on the second floor of the M area.

6.7.2 Fire Alarm Device Designations

Table 6-4 : Fire Alarm Device Designations

Device Designation	Description
A	Annunciation Device (Horn / Strobe)
C	Control Relay Module
D	Detection Device (Heat / Smoke)
E	End-of-line Device
I	Isolation Module
M	Addressable Monitor / Input Module
P	Pullstation
R	Automatic Door Release Device
S	Signal Module

6.7.3 Drawing Format

The format of fire alarm system devices on drawings will typically be as shown in Figure 6-5 below. Note a significant portion of the device identifier is determined via context. Where the context is not clear, use full device identifiers.

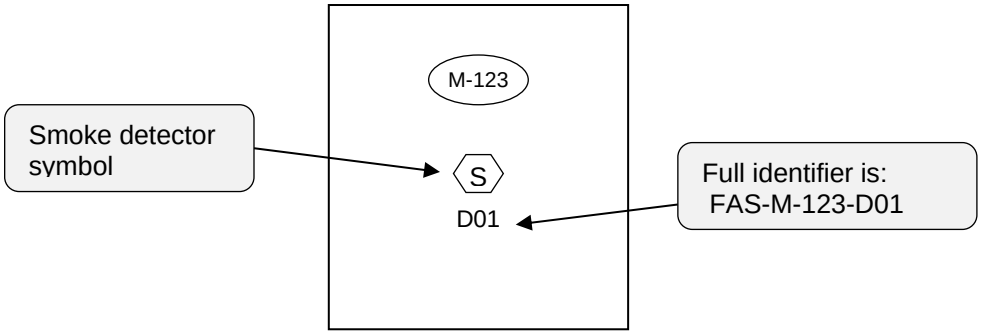

Figure 6-5 : Room Numbering on Drawings – Plan View

6.7.4 Wire Tags

The identification format for fire alarm circuits is as follows.

A	**NN(N)(N)**	**-**	**TTT**	**-**	**CC**
Area Code	Equipment Number of Source Panel	-	Type of Circuit	-	Circuit Number

Where,

A — is the *Area Code* of the source panel or equipment. Typically, this will be the fire alarm control panel, but it could also be a booster power supply.

NN(N)(N) — is the *Equipment Number* of the source panel or equipment.

TTT — is the *Type of Circuit*, selected as follows:

- DLC — Data Communication Link
- IDC — Initiating Device Circuit
- NAC — Notification Appliance Circuit

CC — is the *Circuit Number*, an incrementing number.

Examples:

P901-NAC-01 — Notification appliance circuit 01 out of FACP-P901.

R921-NAC-02 — Notification appliance circuit 02 out of BPS-R921.

P901-DLC-03 — Digital Communication Link circuit 03 out of FACP-P901.

6.8 Security Devices

The identification of security system components is dependent upon the system that the device is connected to. If the security device is connected to a dedicated security system, it shall be identified as per this section. However, devices directly connected to the process control system (i.e. PLC) shall be identified as per Section 7.1.

6.8.1 Device Identifier Format

The security device identifier format is based upon room numbers rather than equipment numbers. This allows for more rapid recognition of the component location, and avoids utilization of a significant portion of the equipment numbering range for security system components.

<table>
<tr><th>FFFF</th><th>-</th><th>SCY</th><th>-</th><th colspan="4">A</th><th>-</th><th>L</th><th>RR</th><th>S</th><th>-</th><th>DD</th><th>N</th></tr>
<tr><td rowspan="2">Facility Code (Optional)</td><td rowspan="2">-</td><td rowspan="2">Security Design-ation</td><td rowspan="2">-</td><td colspan="3">Area Code</td><td>-</td><td>Level</td><td>Room Num</td><td>Suffix (Opt)</td><td rowspan="2">-</td><td rowspan="2">Device Design -ation</td><td rowspan="2">Device Number</td></tr>
<tr><td colspan="7">From Room Number Designation</td><td></td></tr>
</table>

Where,

FFFF	is the *Facility Code*, from Appendix A. The *Facility Code* will typically be implied, and would only be fully written where required.
SCY	is the *Security Designation*, which is comprised of the letters SCY.
A	is the *Area Code*, which is based on Section 2.3.
L	is the *Level*, which shall typically be one or two characters, as described in Section 3.1. For outdoor locations, it is recommended that the EX designation be utilized, as described in Section 3.1.
RR	is the *Room Number*, which shall be assigned as described in Section 3.1.
S	is the Suffix (optional), which corresponds to the Door Identifier for security devices associated with doors
DD	is the Device Designation, which is comprised of two letters from Section 6.8.2.
N	is the *Device Number*, which uniquely identifies a specific device within a room.

Examples:

SCY-S-115B-DC1	The first door switch in on door B of room 15 on the main level of the Secondary Clarifier area.
SCY-M-222-AH2	The second horn/strobe in room 22 on the second floor of the M area.
SCY-S-115A-CR1	The access card reader outside the door (A) to room 15 on the main level of the Secondary Clarifier area.
SCY-A-EX1-VC1	An outdoor video camera in the A area, exterior zone 1.

6.8.2 Security Device Designations

The security device designations are independent of the Process / Mechanical / Electrical / Automation designations, and may overlap those designations.

Table 6-5 : Security Device Designations – Room/Door Specific

Device Designation	**Description**	**Type Modifiers** *(See Note 2)*
AH	Annunciation Device (Horn / Strobe)	H Horn S Strobe
CR	Access Card Reader (See Note 1)	
DC	Door Contact	
EL	End-of-line Device	
ES	Electric Strike (Subcomponent of Door)	
EX	Exit Button	Includes “Request to Exit” and crash bars.
GB	Glass-Break Contact	
IM	Addressable Monitor / Input Module	
IS	Isolation Module	
KP	Keypad	
MD	Motion Detector	
PB	Panic Button	
VC	Camera	FM Flush Mount PTZ Pan/Tilt/Zoom SM Surface Mount

Note:

1. *Access Card Readers will be designated by the door identifier.*
2. *Show the type modifier next to the device as applicable.*

6.8.3 Security Equipment Designations

Some security equipment is preferably identified as major equipment, and not associated with a specific room. The Security equipment designations are shown in Table 6-6.

Table 6-6 : Security Equipment Designations

Equipment Designation	Description
ACP	Access Control Panel
SCP	Security / Intrusion Alarm Control Panel
SVM	Security Video Monitor
SVR	Security Video Recorder

Note:

1. The above equipment will be identified in a manner consistent with Section 6.1.

6.8.4 Equipment Subcomponent Designations

Table 6-7 : Security Equipment Subcomponent Designations

Equipment Subcomponent Designation	Description
MOD	Input / Output Module
PS	Power Supply
PU	Processing Unit

Note:

1. The above equipment will be identified in a manner consistent with Section 6.5.

6.8.5 Wire Tags

The identification format for security circuits is as follows.

A	**NN(N)(N)**	**-**	**TTT**	**-**	**CC**
Area Code	Equipment Number of Source Panel	-	Type of Circuit	-	Circuit Number

Where,

A — is the *Area Code* of the source panel or equipment. Typically, this will be the fire alarm control panel, but it could also be a booster power supply.

NN(N)(N) — is the *Equipment Number* of the source panel or equipment.

TTT — is the *Type of Circuit*, selected as follows:

- DLC — Data Communication Link
- IDC — Initiating Device Circuit
- NAC — Notification Appliance Circuit

CC — is the *Circuit Number*, an incrementing number.

Note:

1. *The Type of Circuit requires review. The Designer may propose alternate types to the City for review and approval.*

Examples:

P951-NAC-01 Notification appliance circuit 01 out of SCP-P901.

P951-DLC-03 Digital Communication Link circuit 03 out of SCP-P901.

7 AUTOMATION

7.1 Instrumentation

7.1.1 Instrument Identifier Format

The identification format for instrumentation is as follows.

<table>
<tr><th>FFFF</th><th>-</th><th>XXXX</th><th>-</th><th>A</th><th colspan="2">NN(N)(N)</th><th>T</th><th>-</th><th>S</th></tr>
<tr><td rowspan="2">Facility Code (Optional)</td><td rowspan="2">-</td><td rowspan="2">Instrument Functional Designation</td><td rowspan="2">-</td><td rowspan="2">Area Code</td><td colspan="2">Equipment Number</td><td>Instrument Number</td><td rowspan="2">-</td><td rowspan="2">Suffix</td></tr>
<tr><td colspan="3">Loop Number</td></tr>
</table>

Where,

FFFF	is the *Facility Code*, from Appendix A. The *Facility Code* will typically be implied, and would only be fully written where required.
XXXX	is the *Instrument Functional Designation*, which is typically comprised of 2 to 4 characters from Section 7.1.3. Note that five character *Instrument Functional Designations* are possible, but should be quite rare.
A	is the *Area Code*, which is based on Section 2.3.
NN(N)(N)	is the *Equipment Number* of the associated equipment. If no equipment is associated, allocate *Equipment Numbers* specific for the applicable instrumentation. Do not suppress 0's for equipment numbers, as all loop numbers at a site should have the same number of digits in the loop number.
T	is the *Instrument Number*, where the number increments from the number 0 through 9. Utilize the number 0 for instruments directly associated with motor starters and control. The *Instrument Number* does not increment for every instrument, but rather increments for every instrument loop.
NN(N)(N)T	is the Loop Number, comprised of the *Equipment Number* together with the *Instrument Number*. Medium to large facilities will utilize four digit loop numbers, while smaller facilities such as wastewater collections facilities will use three digit loop numbers. The NEWPCC facility will utilize five digit loop numbers
S	is the *Suffix*, which is used in the cases of multiple instruments on the same or redundant loops. All suffixes are to be numeric.

Examples:

XY-G2501	A solenoid for the valve XV-G250, where the solenoid is remote from the valve.
LT-M1011-2	Redundant Wet Well level transmitter.
0650-PT-M3011	A pressure transmitter associated with pump M301 at the Hurst Pumping Station. Note that the facility code is optional.
HSR-R1100	A start pushbutton associated with pump P-R110.

TY-B1500	A temperature relay that takes signals from TT-B1501, TT-B1502, TT-B1503, and TT-B1504 and converts to a Modbus protocol.
FV-R12311	A flow valve at the NEWPCC facility, with five digit loop numbers.
ZSS-F3212	A safety switch for CNV-F321.
HS-L010	A start pushbutton for P-L01 at a wastewater lift station.
PG-S1102	A pressure gauge for pump P-S110.

7.1.2 Drawing Format

The format for instrumentation on drawings, such as P&IDs, is shown below:

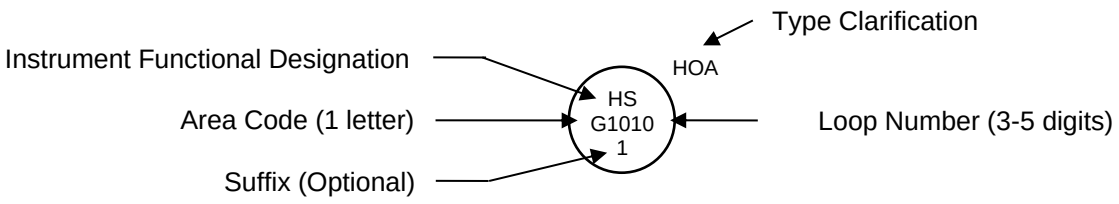

7.1.3 Instrument Functional Designations

An instrument functional designation represents the function of the instrument, and is based upon ISA 5.1. Note that it is possible for an instrument functional designation to be common with a mechanical equipment functional designation, as they will be differentiated by the identifier format. Instrument identifiers will have a four digit loop number, compared with mechanical equipment, which has a three digit equipment number. Thus, even without context, it is possible to differentiate between instruments and other equipment.

Due to the many types of instruments available, a comprehensive list of instrument identifiers is not provided, but rather instrument identifiers are derived from Table 7-1 in a manner that is consistent with ISA 5.1. An instrument functional designation is selected as follows:

- Select the first character from the first column of Table 7-1, based upon the measured or initiating variable of the loop. Optionally, select a second character from the second Modifier column, to indicate a special function associated with the measured or initiating variable. For example, an instrument ultimately part of a safety loop associated with level would have the first two characters designated as LS.
- Select the next character (second or third, depending on whether a second column Modifier is utilized), from either the third or fourth columns. The third column is for Readout or Passive Functions, while the fourth column is for Output Functions.
- Finally, if appropriate, append a letter from the fifth Modifier column, to clarify the function of the instrument. In some cases two characters may be selected from the fifth Modifier column.

A list of common instrument functional designations is provided in Table 7-2.

Table 7-1 : Instrument Functional Designations

	First Letter		Succeeding Letters		
	Measured or Initiating Variable	**Modifier**	**Readout or Passive Function**	**Output Function**	**Modifier**
A	Analysis		Alarm		
B	Burner, Combustion				
C	Conductivity (1)			Control (2)	Close
D	Density (3)	Difference, Differential			Deviation
E	Voltage		Sensor, Primary Element		
F	Flow, Flow Rate	Ratio			Failure / Fault (14)
G			Glass, Gauge Viewing Device (4)		
H	Hand (Manual)				High (15)
I	Current		Indicate (5)		
J	Power		Scan		
K	Time, Schedule	Time Rate of Change		Control Station	
L	Level		Light (6)		Low (16)
M	Moisture, Humidity (7)				Middle, Intermediate
N					
O	Torque		Orifice, Restriction		Open
P	Pressure		Point (Test Connection)		
Q	Quantity	Integrate, Totalize	Integrate, Totalize		
R	Radiation		Record		Run (8)
S	Speed, Frequency	Safety (9)		Switch	Stop (10)
T	Temperature			Transmitter	
U	Multivariable		Multifunction	Multifunction	
V	Vibration, Mechanical Analysis			Valve, Damper, Louver	
W	Weight, Force		Well, Probe		
X	Unclassified (11)	X Axis	Unclassified	Unclassified	Unclassified
Y	Event, State, or Presence	Y Axis		Auxiliary Device (12)	
Z	Position, Dimension	Z Axis, Safety Instrumented System (13)		Driver, Actuator, Unclassified Final Control Element	

Notes for Instrument Functional Designations:

1. *The use of the letter C for conductivity is a City specific user assignment.*
2. *Utilize the output designation C for an automatic device or function that receives an input signal and generates a variable output signal that is used to modulate or switch a valve or otherwise control a final drive element. Do not utilize the C designation for a control valve, unless the valve independently measures the process variable and determines the appropriate valve position. Thus, the use of TCV, FCV, or LCV is not common. The use of PCV is more common, for pressure regulators. In addition, do not use the C controller designation for switches that directly control a device or equipment. For example, a unit heater on/off thermostat would be a TS, not a TC.*
3. *The use of the letter D for density is a City specific user assignment.*
4. *Utilize the letter G for all pressure gauges (i.e. PG), thermometers (i.e. TG), and viewing glasses (e.g. LG).*
5. *The Readout/Passive Function letter I is to be utilized for analog or digital readouts of a measurement or input signal. Do not utilize for indication of discrete on/off signals.*
6. *The Readout/Passive Function letter L is to be utilized for indication of discrete on/off states. Do not utilize for alarms, which should utilize the A designation.*
7. *It is recommended to utilize the initial letter M as a designation for moisture, which is common industry practice. The City has historically applied the letter M for Motor, however this use is not consistent with ISA 5.1 and it is recommended that this use be discontinued.*
8. *Utilize the modifier R to designate a Run or Start modifier. Note that this designation was added in the 2009 revision to ISA-5.1.*
9. *Utilize the letter S as a modifier for safety components not part of a Safety Instrumented System (SIS). The letter S modifier is to be utilized for self-actuated emergency protective primary and final control elements only when used in conjunction with Measured/Initiating Variables flow [F], pressure [P] or temperature [T]. An example is a PSV for a pressure safety relief valve utilized to protect against emergency conditions that are not expected to normally occur.*
10. *Utilize the modifier S to designate a Stop modifier. Note that this designation was added in the 2009 revision to ISA-5.1.*
11. *The letter X is to be defined at the time of use, and may be used for multiple definitions where no other letter is applicable. The letter X is commonly applied to controlled on-off valves, where the initiating variable is not clearly defined.*
12. *The use of output function Y is to be utilized for a device that connects, disconnects, transfers, computes, and/or converts air, electronic, electric, or hydraulic signals or circuits. Use for a current to pressure signal converter would be appropriate.*
13. *Variable modifier Z is to be utilized for all components of a safety instrumented system (SIS). An example is a SIS system pressure transmitter, designated PZT.*
14. *The use of the letter F as a Modifier to represent Failure or Fault is an extension to ISA-5.1.*
15. *Where more than one switch or alarm within the same control loop is designated with a High designation, the second switch or alarm (at a higher level) shall be designated with a High-High designation. An instrument shall not be designated with a High-High designation unless there is an instrument with a High designation already present. For example: A LSH is a first level switch at a high level and a LSHH would be a second level switch at a higher level. Either switch may have associated alarms or interlocks.*
16. *Where more than one switch or alarm within the same control loop is designated with a Low designation, the second switch or alarm (at a lower level) shall be designated with a Low-Low designation. An instrument shall not be designated with a Low-Low designation unless there is an instrument with a Low designation already present. For example: A LSL is a first level*

switch at a low level and a LSLL would be a second level switch at a lower level. Either switch may have associated alarms or interlocks.

Table 7-2 : Common Instrument Functional Designations

Designation	Direct Translation	Example
AA	Analysis Alarm	Gas detection horn / strobe
AAH	Analysis High Alarm	H_2S gas detection high level alarm
AT	Analysis Transmitter	H_2S gas detection transmitter
DT	Density Transmitter	Density transmitter without local indication
EG	Voltage Viewing Device	Capacitive voltage indicator
EL	Voltage Light	Pilot light indicating voltage is present
EI	Voltage Indicator	Voltage meter with numeric scale, or digital meter
ES	Voltage Switch	General voltage relay
ESL	Voltage Switch - Low	Undervoltage relay
ET	Voltage Transmitter	Voltage transducer
FAL	Flow Alarm - Low	Pilot light indicating low flow
FCV	Flow Control Valve	Integrated valve to limit the flow below a setpoint. The valve is not externally controlled.
FE	Flow Element	Magnetic flowtube, orifice plate
FIT	Flow Indicating Transmitter	Magnetic flowmeter transmitter with local indication
FT	Flow Transmitter	Magnetic flowmeter transmitter without local indication
FV	Flow Valve	Butterfly valve with positioner, modulated by a signal initiated by a flowmeter.
HS	Hand Switch	Hand/Off/Remote switch
HSR	Hand Switch – Start/Run	Start pushbutton
HSS	Hand Switch - Stop	Stop pushbutton, including emergency stop pushbuttons, unless associated with a Safety Instrumented System.
JIT	Power Indicating Transmitter	Power meter
KS	Time Switch	Timing relay
LSH	Level Switch - High	Sump pit high level switch
LSL	Level Switch - Low	Sump pit low level switch
LE	Level Sensor	Ultrasonic level transducer
LIT	Level Indicating Transmitter	Ultrasonic level transmitter with local indication
LT	Level Transmitter	Ultrasonic level transmitter without local indication

Designation	Direct Translation	Example
ME	Moisture Sensor	Moisture sensor. Includes submersible pump/mixer leakage detector.
OSH	Torque Switch - High	Torque limit switch
PG	Pressure Gauge	Mechanical pressure gauge local to piping
PI	Pressure Indicator	Pressure display remote from piping, with scale.
PSL	Pressure Switch - Low	Low pressure switch on air receiving tank
PSH	Pressure Switch - High	High pressure switch on air receiving tank
PT	Pressure Transmitter	Analog pressure transmitter
ST	Speed Transmitter	Speed pulse encoder
TE	Temperature Element	Thermocouple or RTD temperature sensor
TG	Temperature Gauge	Local temperature gauge
TSH	Temperature Switch - High	High temperature switch
TI	Temperature Indicator	Digital temperature indicator or local analog indicator based upon a capillary tube
TSL	Temperature Switch - Low	Low temperature switch. The switch may be associated with process control, interlock, alarm or any combination thereof.
TSLL	Temperature Switch – Low-Low	A second low temperature switch that has a setpoint lower than the first low temperature switch. The switch may be associated with process control, interlock, alarm or any combination thereof.
TT	Temperature Transmitter	Analog temperature transmitter
VE	Vibration Sensor	Vibration sensor
VIT	Vibration Indicating Transmitter	Vibration transmitter with local indication
XV	Unclassified Valve	Typically use for on/off valves
YS	Presence Detector	Use for motion detectors that are connected to the process control system and not to a security system. Use Section 6.8 for security systems.
ZSC	Position - Closed	Valve closed limit switch
ZSO	Position - Open	Valve opened limit switch
ZT	Position Transmitter	Linear position transmitter

7.1.4 Loop Numbers

The equipment number (2-4 as applicable) digits of a loop number shall be identical to the equipment with which the instrument is associated.

Motor controls of motorized equipment should have an *Instrument Number* of 0. For example, a local start/stop switch for pump P-S305 should be designated as HS-S3050 or with a suffix such as HS-S3050-2. Nothing precludes the use of a 0 *Instrument Number* for instruments not associated with motorized equipment.

The *Loop Number* should generally be unique for each instrument loop. For example, outdoor air, mixed air, and supply air temperature transmitters on an air handling unit should all have different loop numbers as they are measuring different temperatures.

Exceptions will only be permitted where:

- The two instrument loops are performing the identical function. For example, two thermal dispersion flowmeters measuring the same point and being averaged in software should utilize the same loop number with different suffixes.
- No other good alternatives exist. Note that use of a common loop number for multiple loops will require careful attention in wiring and signal tagging.

7.1.5 Type Clarification

The instrument *Type Clarification* is an optional additional field on the outside of the instrument tag bubble, as shown in Section 7.1.2. The *Type Clarification* is not part of the identifier, but rather additional information that is useful to the P&ID reader. The site P&ID legend sheet should contain all type clarifications utilized at the site. Examples are provided in Table 7-3 on the next page, and additional examples are provided in Table 5.2.2 of ISA 5.1.

Table 7-3 : Type Clarification Examples

Functional Identifier	Type Clarification	Description
AIT	CO	Carbon monoxide transmitter
AIT	COMB	Combustible gas transmitter
AIT	H2S	Hydrogen sulphide transmitter
AIT	O2	Oxygen transmitter
FE	COR	Coriollis flow element
FE	MAG	Magnetic flow element
FE	US	Ultrasonic flow element
HS	H/O/A	Hand / Off / Auto Switch
HS	H/O/R	Hand / Off / Remote Switch
HS	O/A	Off / Auto Switch
HS	O/O	Off / On Switch
HS	RST	Reset
HSS	EMG	Emergency Stop Switch
LE	CAP	Capacitance level element
LE/LT	DP	Differential pressure level element
LE	RAD	Radar level element
LE/LT	SDP	Submersible differential pressure
LE	US	Ultrasonic level element
PT	ABS	Absolute pressure transmitter
PT	VAC	Vacuum pressure transmitter
TT	TC	Thermocouple temperature transmitter
TT	RTD	Resistance temperature transmitter

7.1.6 Valve Identification

Historically there has been some confusion regarding valve identification, and the purpose of this section is to clarify the appropriate functional identification for valves, as per ISA 5.1.

7.1.6.1 Manual Valves

All manual valves are to be identified as HV, as per Sections 5.2.1, 5.2.2 and 5.2.3.

Valves that have an actuator, but are always operator controlled remotely via a PLC, DCS, or some other control system are to be identified as per Sections 7.1.6.4 and 7.1.6.5.

Instrument isolation valves less than or equal to 12mm do not require identification if there is no requirement to identify them in an operations procedure.

7.1.6.2 Actuated Valves with Internal Controller

A self-actuating valve that has a process signal as an input is a *control valve*, where the initial letter is the measured process variable. Examples are as follows:

FCV — Flow Control Valve – a valve with an internal mechanism or logic that measures flow and controls it to some setpoint. For example, this could be a Foundation Fieldbus Controlled valve. A valve that has flow as it's initiating variable, but receives a position signal from an external controller is **not** a FCV, but a FV (as per ISA 5.1)

PCV — Pressure Control Valve – a valve with an internal mechanism or logic that measures pressure and controls it to some setpoint. For example, this could be a Foundation Fieldbus Controlled valve with an integral PID controller. A valve that controls pressure, but receives a position signal from an external controller is **not** a PCV (as per ISA 5.1). Note that while a mechanical pressure regulator is functionally identified as a PCV, it is identified as per 5.2.3.

7.1.6.3 Actuated Valves with External Controller

A valve with an actuator that is positioned by an external signal is a *control valve*, where the initial letter is the measured process variable. Examples are as follows:

FV — Flow Valve – a valve with or without a positioner, that is positioned by an external controller based upon a measured or initiating flow signal. The signal from the external controller to the valve is a position command signal. Note that many valves control the flow within a pipe, but not all such valves are necessarily *Flow Valves*, as per ISA 5.1. Only valves that have a control loop with flow as the initiating variable are *Flow Valves*.

LV — Level Valve – a valve with or without a positioner, that is positioned by an external controller, that uses level as its initiating or measured variable. The signal from the external controller to the valve is a position signal. Note that while the valve may control the flow within the pipe, it is not a *Flow Valve* if the initiating variable is *Level*.

PV — Pressure Valve – a valve with or without a positioner, which is positioned by an external controller based upon level as its initiating or measured variable. The signal from the external controller to the valve is a position command signal. Note that while the valve may control the flow within the pipe, it is not a *Flow Valve* if the initiating variable is *Pressure.*

UV — Multivariable Valve – a valve with or without a positioner, that is positioned by an external controller based upon multiple variables as input into the

controller. The signal from the external controller to the valve is a position command signal. Note that while the valve may control the flow within the pipe, it is not a *Flow Valve* if there are multiple initiating variables.

7.1.6.4 Actuated Valves (Modulated) with Operator Control

A valve with an actuator that is positioned by a signal controlled by a human operator is to be identified by the major initiating variable that the operator would reference. Note that this definition is only marginally consistent with ISA 5.1, as a direct interpretation of ISA 5.1 would likely result in a HV – *Hand Valve* identification. Discussions with City personnel have indicated that it is not desirable to identify these valves as *Hand Valves*, which in their opinion, should be reserved for manual valves. Not that this identification only applies to modulating valves and not to on/off valves.

Examples:

FV-T4061 An valve actuated from a signal, that is controlled by an operator via an HMI interface. The operator periodically monitors a flow rate in the process and manually adjusts the position setpoint for the valve.

7.1.6.5 Actuated On/Off Valves

An on/off valve with an actuator that is controlled by an external controller is to typically be identified as an XV, or *Undefined Valve*. ISA 5.1 is not clear on how to address the identification of on/off valves, and while YV (State Valve) or UV (Multivariable Valve) are potential identifiers, common industry practice is that XV is commonly utilized. Discretion must be applied, and while there are cases where on/off valves with other initial variables would be appropriate, it is recommended that all on/off valves, where the initiating variable is not clear, be identified as XV. On/Off valves with remote operator control are also to be identified as XV, unless the initiating variable that the operator is responding to is absolutely clear.

Examples:

XV-G6011 An on/off intake damper on an air handler, AHU-G601, which closes when the air handler is not in operation.

XV-M1511 An on/off discharge valve on a pump, P-M151, which closes when the pump is not in operation.

LV-S2032 An on/off valve that shuts off when the level in tank TK-S203 exceeds a setpoint. This is an example where the initiating variable is clearly level, and the valve should be identified as such.

XV-R325 An on/off valve that interconnects two forcemains in a wastewater forcemain application, that is actuated by operator control. Note that the loop number is only three digits as this is a *Collections* application.

7.1.7 Multi-Function Instruments

Each discrete physical instrument shall only be given one instrument identifier, regardless of the number of functions within that instrument. For example, a submersible pump protection relay may have a temperature relay and a leak detection relay within one device. The instrument would be identified with a single identifier and a functional designation of UY. If it is desired to show the specific functionality of the instrument, then the subcomponent format described in Section 7.6 shall be utilized.

7.1.8 Additional Clarifications

7.1.8.1 Submersible Pumps and Mixer Leak Detection

Submersible pump and mixer leak detection sensors shall be identified with a functional designation of ME (Moisture Element).

7.1.8.2 Temperature Transmitters

Temperature transmitters with integrated temperature elements shall be identified with a functional designation of TT or TIT. In the event that the integrator temperature element of the temperature transmitter requires identification, utilize the subcomponent format (i.e. S682-TT.TE). On P&IDs, do not show the temperature element if integrated with the temperature transmitter. Refer to Figure 7-1 for examples.

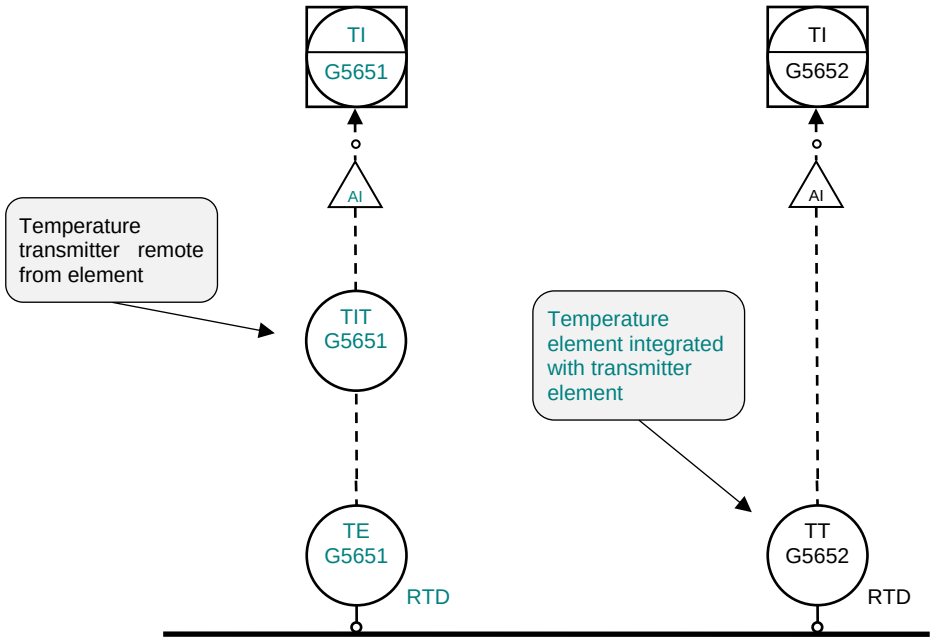

Figure 7-1: Example Temperature Transmitters

7.2 Automation Equipment

7.2.1 Identifier Format

The identification format for automation equipment, other than instrumentation, is as follows.

FFFF	**-**	**EEEE**	**-**	**A**	**NN(N)(N)**	**-**	**S**
Facility Code (Optional)	-	Equipment Functional Designation	-	Area Code	Equipment Number	-	Suffix (Optional)

Where,

FFFF	is the *Facility Code*, from Appendix A. The *Facility Code* will typically be implied, and would only be fully written where required.
EEEE	is the *Equipment Functional Designation*, which is comprised of 2 to 4 characters from Section 7.2.2.
A	is the *Area Code*, which is based on Section 2.3.
NN(N)(N)	is the *Equipment Number*. Select numbers consistent with the ranges in Appendix D.
S	is the Suffix, an optional numeric or letter code to distinguish between multiple pieces of equipment with a common equipment number. Generally, numbers are utilized for equipment in series, and letters for equipment in parallel.

Examples:

0101-PLC-G8101	A PLC located in the Grit area of the NEWPCC facility.
PLC-G110	A PLC dedicated to pump P-G110.
RIO-G110-1	Remote I/O associated with PLC-G110
JBA-G851	A junction box not associated with a specific mechanical unit of equipment, and thus numbered in the 800 series equipment numbers.
JBA-L52	An automation junction box in a Collections Facility.

7.2.2 Functional Designations

Table 7-4 : Automation Equipment Functional Designations

Functional Designation	Description	Notes
ADP	Automation Device Panel	
CA	Cable (Automation)	
CP	Control Panel / Cabinet	
CS	Computer Server	
CW	Computer Workstation - General	
CWD	Computer Workstation - Development	
CWO	Computer Workstation - Operator	
DCS	Distributed Control System	
FDP	Field Device Panel	Use for new installations should not be common.
GDC	Gas Detection Controller	
LHMI	Standalone Human Machine Interface (HMI) Terminal	e.g. local touchscreens
ISB	Intrinsic Safety Barrier	Typically only a subcomponent.
JBA	Junction Box (Automation)	
LCP	Local Control Panel	
PLC	Programmable Logic Controller	
PRN	Printer	
RIO	Remote I/O	
RTU	Remote Terminal Unit	
TB	Terminal Block	Subcomponent only.

Notes:

1. *Avoid overlap of Automation Equipment Functional Designations with Electrical, Mechanical, or Process Functional Designations.*

7.2.3 IT Equipment Designations

Equipment within the domain of the City's Information Technology division may utilize a City IT specific identifier. Where this IT identifier is utilized, it is recommended that it is utilized in parallel to the identifiers in this standard. The rationale for this is as follows:

- The IT identifiers are created and tracked by a separate division within the City and are not managed by the same groups responsible for the remainder of the assets of the Water and Waste department.
- The IT identifiers are not consistent with this standard.
- The IT identifiers are applied in a "serial number" style to a specific piece of hardware, and not utilized as an asset identifier, as per the equipment within this standard. For example, if a computer is replaced, the IT identifier would change. However, for computers shown on automation drawings, use of the IT identifier in the automation domain would require that all relevant drawings with identifiers be updated.
- It is recommended to segregate the IT and Automation domains as much as possible.

7.3 Automation Cables

7.3.1 Instrumentation Cables

The identification format for automation cables is as follows. Note that the identification of power cables is discussed in Sections 6.4.2 and 6.4.3.

CA	**-**	**A**	**NN(N)(N)T**	**-**	**S**
Cable Designation	-	Area Code	Loop Number of Instrumentation	-	Suffix (Optional)

Where,

CA — is the *Cable Designation*, which for automation cables is comprised of the letters CA.

A — is the *Area Code*, which is based on Section 2.3.

NN(N)(N)T — is the *Loop Number* of the associated instrument. Where the cable connects two instrumentation devices with different loop numbers, identify the cable by the device that provides the signal.

S — is the *Suffix* utilized to identify the specific cable associated with the loop The Suffix is not required if a single cable is associated with the instrument loop. Utilize sequential numbers for cables in series, or for different purposes, and letters for cables in parallel.

Examples:

CA-G6831 — A cable from FSL-G6831 to a control panel.

CA-S5011-1 — A signal cable from a flowmeter to a control panel mounted instrument, FC-S5011.

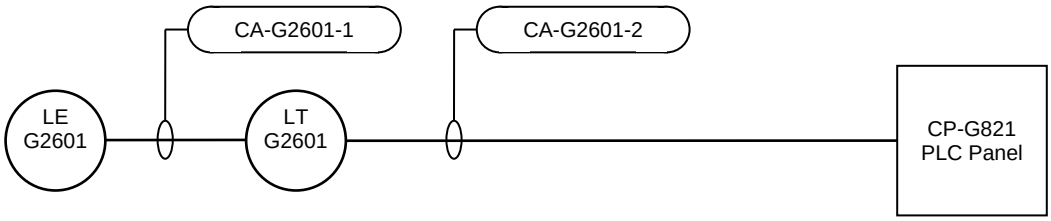

Figure 7-2: Instrument Cable Identification Example – Level Transmitter

7.3.2 Cables Associated with Identified Equipment

The identification format for automation cables is as follows.

CA	**-**	**A**	**NN(N)(N)**	**-**	**S**
Cable Designation	-	Area Code	Equipment Number of Associated Equipment	-	Suffix (Optional)

Where,

CA — is the *Cable Designation*, which for automation cables is comprised of the letters CA.

A — is the *Area Code*, which is based on Section 2.3.

NN(N)(N) — is the *Equipment Number* of the associated equipment. Where the cable connects two pieces of equipment, identify by the downstream, or serviced piece of equipment.

S — is the *Suffix* utilized to identify the specific cable associated with the equipment. The Suffix is not required if a single cable is associated with the equipment. Utilize sequential numbers for cables in series, or for different purposes, and letters for cables in parallel.

Note: In some cases, a cable could be considered either associated with instrumentation (4 digit loop number as per Section 7.3.1) or equipment (3 digit equipment number as per this section). It is left up to the designer to select the most appropriate cable identifier.

Examples:

CA-G683-1 — A 120 VAC control cable for pump P-G683.

CA-F723 — A control cable for UPS-F723

CA-P711 — A cable with a signal from a breaker status in PNL-P711.

Figure 7-3: Instrument Cable Identification Example – Identified Equipment

7.4 Sample P&ID

A sample pump P&ID is provided below to illustrate typical conventions for identifying instrumentation.

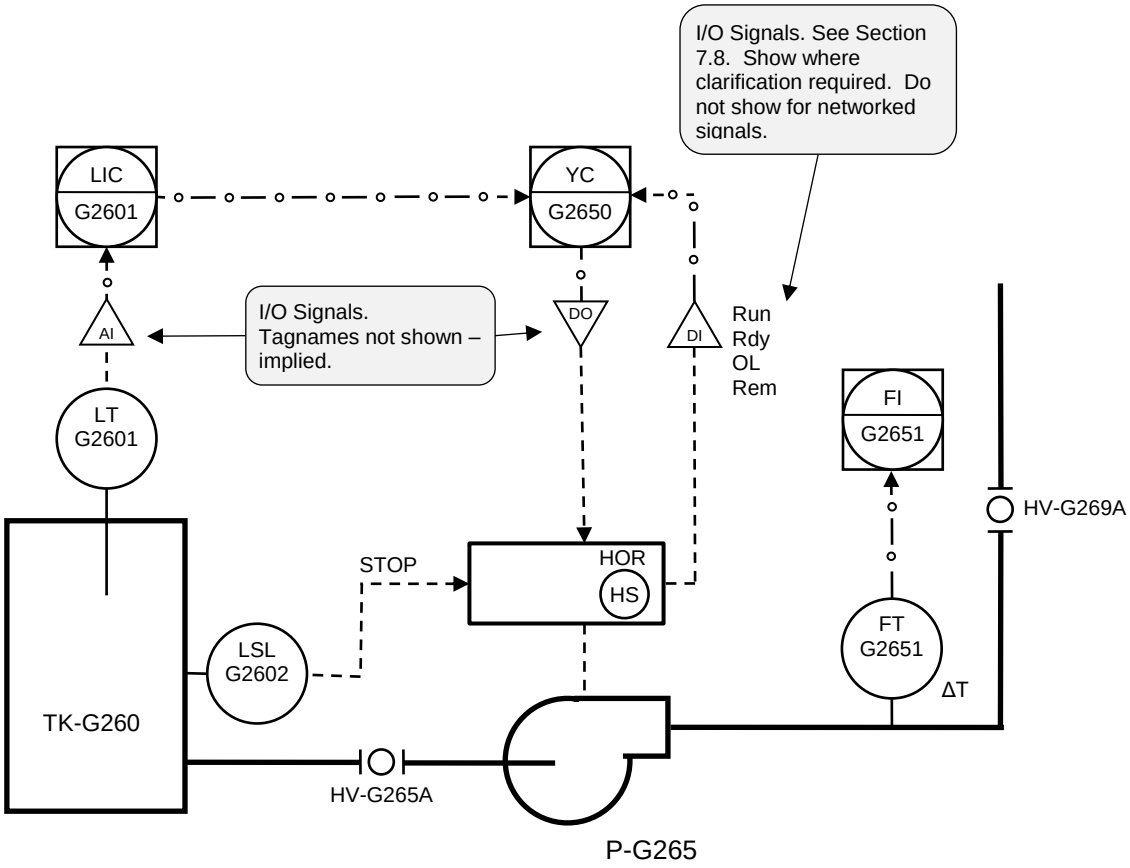

Figure 7-4: Sample Pump P&ID

7.5 Wire Tags

7.5.1 Power Circuits within Control Panels

Power circuits within control panels only require unique identification within the control panel. Where power circuits extend outside the panel, they will typically be based upon the wire tagging scheme identified in Sections 7.5.2 and 7.5.3.

The identification format for power circuit wire tags within control panels is as follows.

D	**W**
Power Designation	Wire Number

Where,

D is the *Power Designation*, which is based upon Table 7-5.

W is the *Wire Number*, an incrementing number.

Table 7-5 : Wire Tag Power Designations

Power Designation	**Description**
C	DC Common (0V)
G	Ground
L	AC Power (Hot)
N	AC Neutral
P	DC Positive
NEG	DC Negative (not grounded)

Note: The Ground designation is not typically required, provided that the ground wire is green.

Examples:

L1 Main 120VAC circuit within a control panel.

L11 120VAC sub-circuit, after fuse FU-11.

N1 AC Neutral associated with circuit L1.

P22 24VDC circuit

C1 24VDC common wire (0V)

7.5.2 Control Circuits

The identification format for automation control circuits is as follows:

<table>
<tr><th>A</th><th>NN(N)(N)</th><th>T</th><th>-</th><th>W</th><th>S</th></tr>
<tr><td rowspan="2">Area Code</td><td>Equipment Number</td><td>Instrument Number</td><td rowspan="2">-</td><td rowspan="2">Wire Number</td><td rowspan="2">Suffix (Optional)</td></tr>
<tr><td colspan="2">Loop Number</td></tr>
</table>

Where,

A	is the *Area Code*, which is based on Section 2.3.
NN(N)(N)	is the *Equipment Number* of the associated equipment. If no equipment is associated, allocate *Equipment Numbers* specific for the applicable instrumentation.
T	is the *Instrument Number*, where the number increments from the number 1 through 9. Use of the number 0 should be infrequent, except for special instruments, or those where the instrument ending with 0 is a common instrument that serves other instruments.
NN(N)(N)T	is the Loop Number, comprised of the *Equipment Number* together with the *Instrument Number*.
W	is the *Wire Number*, which is typically an incrementing number. For power wires the *Wire Number* shall be based on Table 7-5.
S	is an optional *Suffix*, and is utilized where it is desired to utilize the same wire number, but the signal has changed.

Notes:

1. *It is not required that the Wire Number match the control panel terminal number.*
2. *See Section 6.4.6.4 regarding wire numbering for motor control circuits.*

Examples:

G6521-11	Control wire 11 associated with TSH-G6521.
G6521-11A	Control wire 11A associated with TSH-G6521.
G6522-P	24VDC Power wire for FT-G6522.
G6522-C	24VDC Common wire for FT-G6522.

7.5.3 Analog Signal Circuits - Instruments

The identification format for analog signal circuits associated with instruments is as follows:

A	**NN(N)(N)**	**T**	**-**	**W**	**A**
Area Code	Equipment Number	Instrument Number	-	Wire Number (Optional)	Analog Designation
	Loop Number				

Where,

A	is the *Area Code*, which is based on Section 2.3.
NN(N)(N)T	is the Loop Number, comprised of the *Equipment Number* together with the *Instrument Number*.
W	is the *Wire Number*, an incrementing number. The wire number may optionally be omitted for two wire control.
A	is the Analog Designation, which is typically either "+" or "–". For power wires the designation shall be based on Table 7-5.

Notes:

1. *It is not required that the Wire Number match the control panel terminal number.*
2. *For two-wire signals, use "+" and "-" designations. Do not utilize a power designation "-P" for two wire signals.*

Examples:

G6523+	Signal wire + associated with TT-G6523.
G6523-	Signal wire - associated with TT-G6523.
M4215-1+	Signal wire 1+ associated with FT-M4215
M4215-P	24VDC power wire associated with FT-M4215 (Four wire signal).

7.5.4 I/O Wiring

I/O wiring within a control panel is designated by the I/O address rather than the connected instrument. This allows for a more straightforward control panel layout, and avoids relabeling internal panel wiring upon reallocation of I/O. The identification format for I/O wiring in a control panel is as follows:

DD	**R**	**.**	**M**	**.**	**N**	**S**
I/O Designation	Rack Number (Optional)		Module Number (Optional)		I/O Number	Suffix Designation (Optional)

Where,

DD is the *I/O Designation*, which is based on Table 7-6.

R is the *Rack Number*, which is typically one or two digits. A Rack Number is not applicable to all I/O systems.

M is the *Module Number*, which is typically one or two digits. A *Module Number* is not applicable to all I/O systems.

S is the *Suffix Designation*, if applicable, which is based on and typically is either “+” or “–“.

Table 7-6 : I/O Designations

Power Designation	**Description**
AI	Analog Input
AQ	Analog Output
I	Discrete Input (AC or DC)
Q	Discrete Output (AC or DC)

Table 7-7 : Suffix Designations

Suffix Designation	Description
C	Utilize for isolated DC discrete input modules to designate the specific common line.
L	Utilize for isolated output modules and relay modules to designate an AC incoming line.
N	Utilize for isolated AC discrete input modules to designate the specific neutral line.
P	Utilize for isolated output modules and relay modules to designate an DC incoming line.
+	Analog positive or incoming wire.
-	Analog negative or outgoing wire.

Notes:

1. *The I/O Wiring Designation is to be utilized within a control panel only. Utilize wire designations based upon Sections 7.5.2 and 7.5.3 for wiring outside the control panel.*
2. *It is acceptable for a wire on one side of a terminal to be designated by an I/O designation and to have an alternate identifier for the wire on the other side of the terminal.*

Examples:

AI1.0.1+	Analog input + wire associated with rack 1, module 0, point 1.
AQ5.3-	Analog output – wire associated with module 5, point 3. The rack number is not applicable.
I52	Discrete input 52. The rack number and module number are not applicable.
I5.3.31	Discrete input associated with rack 5, module 3, point 31.
Q2.1.5	Discrete output associated with rack 2, module 1, point 5.
Q3.2.5L	Incoming AC line signal for discrete output relay associated with rack 3, module 3, point 5.

7.6 Subcomponents

7.6.1 Instrumentation Subcomponents

As described in Section 2.6, devices that are an inherent component of a larger unit of equipment or instrumentation are designated as subcomponents. With a strict implementation of ISA 5.1, these subcomponents would potentially be given full identifiers. However, in assigning full identifiers for these signals, the relationship between the subcomponent and its parent piece of equipment is not always clear. Additionally, more identifiers are used as a result of having to assign an identifier to each subcomponent. A good example of instrumentation subcomponents is a valve with limit switches. The limit switches are typically deemed to be a subcomponent of the valve.

As described in Section 2.6, subcomponents can be identified by extending the containing equipment name with a suffix. The parent equipment identifier and suffix are to be separated by a period. This system creates a hierarchy, allowing for rapid identification of subcomponents and reduces programming efforts when integrating these signals into an automation system.

A good example for a mechanical piece of equipment that contains subcomponents is a valve actuator with integrated open and closed limit switches. The limit switches would not typically be labelled separately in the field, as there is no specific discrete equipment to attach the label to, other than the valve actuator as a whole. The suffix would be based upon the subcomponent's functional identification. For example, a P&ID example with a subcomponent is shown in Figure 7-5. Note that the subcomponents of the valve are the limit switches, identified as follows:

XV-G381.ZSO	The open limit switch of the valve XV-G3811
XV-G381.ZSC	The closed limit switch of the valve XV-G3811
MS-6381.HS	The *Hand-Off-Remote* switch on motor starter MS-G381.

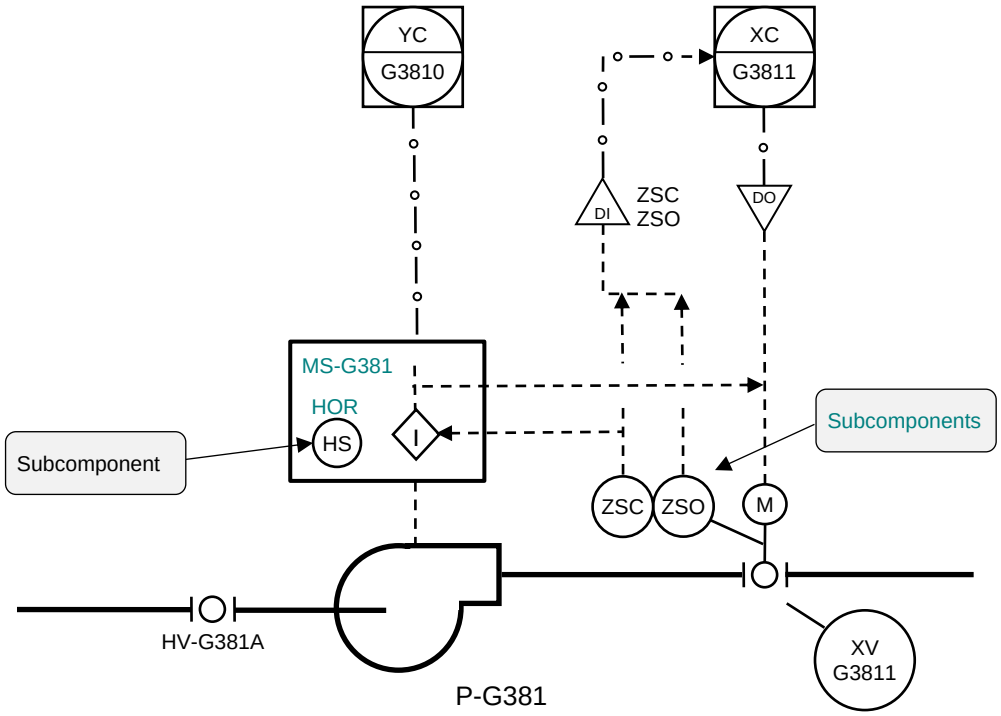

Figure 7-5 : Subcomponents – Electrical and Instrumentation

7.6.2 Panel Subcomponents

Devices within control panels, automation device panels, junction boxes, and other panels should typically be identified as subcomponents unless they are accessed separately from the containing panel. Examples of equipment not to be identified as subcomponents are shown in Table 7-8.

Table 7-8 : Automation Equipment Not To Be Identified as Subcomponents

Functional Designation	Description
CS	Computer Server
CW	Computer Workstation - General
CWD	Computer Workstation - Development
CWO	Computer Workstation - Operator
GDC	Gas Detection Controller
LHMI	Standalone Human Machine Interface (HMI) Terminal
PLC	Programmable Logic Controller
PRN	Printer
RIO	Remote I/O
RTU	Remote Terminal Unit

7.7 Software Configuration File Naming

Where software to configure automation equipment does not include integral version management, software configuration file names shall be composed as follows.

FFFF		E*		YYYY	MM	DD	-	X
Facility Code (Optional)	-	Equipment Identifier	-	Year	Month	Day	-	Revision Modifier (Optional)
				Date				

Where,

FFFF	is the *Facility Code*, from Appendix A. The *Facility Code* will typically be implied, and would only be included in the filename where required.
E*	is the unique *Equipment Identifier*, as identified by other sections of this document.
YYYYMMDD	is the date of the last edit.
X	is the *Revision Modifier*, which a letter beginning with A, B, C…. used to indicate intra-day revisions.

Examples:

PLC-G250-20120819	A PLC program for PLC-G250 last edited on August 19, 2012.
LT-M1011-20120501-B	A configuration file for level transmitter LT-M1011, dated May 1, 2012, second revision.
NSW-C901-20121231	A network switch configuration file dated December 31, 2012.

7.8 I/O and Signal Tags

7.8.1 Discrete Input Signals

Identification of discrete input signals (I/O) will be as follows:

E*	.	F	_	S
Base Equipment / Instrument Identifier	.	Functional Signal Designation		Suffix (Optional)

Where,

E* is the *Base Equipment / Instrument Identifier*, based upon other parts of this document. See the examples for clarification.

F is the *Functional Signal Designation*, which represents the type of discrete signal. The *Functional Signal Designation* shall utilize ISA-5.1 style naming convention where applicable, but if not applicable, shall be based on Table 7-9.

S is the optional *Suffix*, which is a number utilized to differentiate between multiple similar signals.

Table 7-9 : Discrete Input Functional Signal Designations – Non ISA

Signal	Description
.Auto	Hand Switch Auto Position
.Byp	Hand Switch Bypass Position
.Flt	Faulted (See Note 5)
.HS_*	Signal from Hand Switch Integrated into Equipment. (See Note 4)
.Loc	Hand Switch Local Position
.Man	Hand Switch Manual Position
.Occ	Hand Switch Occupied Position
.Off	Hand Switch Off Position
.Rdy	VFD / Motor Starter Ready
.Rem	Hand Switch Remote Position
.Rst	Hand Switch Reset Pushbutton
.Run	Motor Running
.RunHi	Motor Running High Speed
.RunLo	Motor Running Low Speed
.Start	Hand Switch Start Pushbutton
.Stop	Hand Switch Start Pushbutton

Notes:

1. *The above list does not indicate ISA 5-1 style functional designations, based upon Table 7-1, where applicable. This table is to be utilized only when an ISA 5-1 style designation is not appropriate or clear.*
2. *The above list is not exhaustive, and the designer is expected to follow a similar convention to the above when assigning new signal names. Commonly used signal names should be added to the table.*
3. *ISA 5.1 style designations are to utilize capital letters only. Non ISA-5.1 designations are to use a first capital letter, followed by lowercase letters.*
4. *A combination of ISA and non-ISA designations is permissible, provided they are connected via an underscore. For example: HS_Rem represents a hand switch remote position for a non-identified switch on a piece of equipment.*
5. *Utilize Flt (Fault) rather than an overload designation for the signal coming from a motor overload. With current electronic overloads, multiple conditions other than just an overload can cause an alarm/trip and the fault designation is more appropriate.*

Examples:

HSS-G1051	Stop pushbutton signal from HSS-G1051, which is associated with pump P-G105. Note that no Functional Signal Designation is required, as only a single, unambiguous signal is provided from the switch.
P-G105.Rem	The switch in *Remote* signal from the *Hand-Off-Remote* switch HS-G105, which is associated with pump P-G105. A Functional Signal Designation is required to clarify the indicated specific switch position.
VFD-G101.Flt	VFD fault signal for pump P-G101. As the fault is associated with the VFD, the VFD is deemed to be the *Source Equipment / Instrument Identifier*.
AHU-M602.Run	Running signal from AHU-M602 motor starter. As the air handling unit is deemed to be the functional source of the running signal, it is deemed to be the *Source Equipment / Instrument Identifier*.
FT-S6021.Flt	Fault signal associated with flow transmitter FT-S6021.
XV-S3810.ZSC	Closed limit switch signal from valve XV-S3810.
XV-S3810.Auto	Hand switch in auto signal from valve XV-S3810.
TSH-G1051	A high temperature signal from TSH-G1051.
TSH-G1052-1	A high temperature signal from TSH-G1052-1.
TY-G1053.TSH	A high temperature output signal from a temperature relay.

Acceptable Alternate

In some cases, equipment may be complex, and it may be desired to associate all I/O directly with the source instrument / device / equipment, even for motor control. If this scheme is implemented, it is to be consistent across the facility. Note that this scheme is not currently accepted for wastewater facilities.

Example:

HS-G1050.Rem	The switch in *Remote* signal from the *Hand-Off-Remote* switch HS-G105, which is associated with pump P-G105. In this alternate scenario, note that the Base Equipment / Instrument Identifier is the actual instrument rather than the associated equipment. A Functional Signal Designation is required to clarify the indicated specific switch position.

7.8.2 Discrete Output Signals

Identification of discrete output signals (I/O) will be as follows:

E*	**.**	**Cmd**	**F**	**_**	**S**
Controlled Equipment / Instrument Identifier	.	Output Designation	Functional Signal Designation		Suffix (Optional)

Where,

E*	is the *Controlled Equipment / Instrument Identifier*, based upon other parts of this document.
Cmd	Is the *Output Designation*, utilized to identify all outputs signals.
F	is the *Functional Signal Designation*, which represents the type of discrete signal. The *Functional Signal Designation* shall be based on Table 7-10.
S	is the optional *Suffix*, which is a number utilized to differentiate between multiple similar signals.

Examples:

AHU-M602.CmdRun	Motor run output signal for AHU-M602.
VFD-M602.CmdEnb	Enable command to the VFD-M602, which is associated with AHU-M602. The *Controlled Equipment / Instrument Identifier* is deemed to be the VFD, as the enable command is deemed to be specific to the VFD.
YL-M6011.CmdOn	Output signal to turn on pilot light YL-M6011.
XV-S3810.CmdCls	Close signal command to valve XV-S3810.

Table 7-10 : Discrete Output Functional Signal Designations

Signal	Description
.CmdRun	Run Command
.CmdRunHi	Run Command – High Speed
.CmdRunLo	Run Command – Low Speed
.CmdRst	Fault Reset Command
.CmdCls	Close Command
.CmdOpn	Open Command
.CmdEnb	Enable Command
.CmdExt	Extend Command (utilize for samplers)
.CmdRet	Retract Command (utilize for samplers)

Notes:

1. *The above list is not exhaustive, and the designer is expected to follow a similar convention to the above when assigning new signal names. Commonly used signal names should be added to the table.*
2. *All discrete outputs are to be prefixed with the Cmd designation.*

7.8.3 Analog Signals Generated From Equipment

Identification of analog control system software I/O and signal tags, where the source of the signal is not identified as an instrument, will be as follows:

E*	**.**	**F**	**_**	**S**
Equipment Identifier	.	Functional Variable		Suffix (Optional)

Where,

E* is the *Equipment Identifier*, based upon other parts of this document.

F is the *Functional Variable*, which represents the type of analog signal. This field is only required for multivariable transmitters. The *Functional Variable* shall be based on the first column of Table 7-1, with an optional character from the second column. Note that the *Functional Variable* is based upon ISA 5.1.

S is the optional *Suffix*, which can be any short designation appropriate to represent the specific signal. Ideally the suffix will be four characters or less. The *Suffix* is separated from the Functional Variable by an underscore.

Note:

1. Do not use this format for analog signals from identified instruments. Refer to Section 7.8.4.

Examples:

UPS-G702.E_Bat	UPS–G702 Battery Voltage Level
UPS-G702.E_In	UPS–G702 Input Voltage Level
UPS-G702.E_Out	UPS–G702 Output Voltage Level
VFD-G101.T	VFD-G101 internal temperature.
CB-M01.RLY.E_An	The voltage signal between phase A and neutral for the protection relay associated with circuit breaker CB-M01.
MS-S501.I_A	The phase A current associated with motor starter MS-S501.

7.8.4 Analog Measured Signals Generated From Instruments

Identification of analog control system software I/O and signal tags, where the source of the signal is an instrument, will be as follows:

I*	**.**	**F**	**_**	**S**
Instrument Identifier	.	Functional Variable (Optional)		Suffix (Optional)

Where,

I* is the *Instrument Identifier*, based upon other parts of this document.

F is the *Functional Variable*, which represents the type of analog signal. This field is only required for multivariable transmitters. The *Functional Variable* shall be based on the first column of Table 7-1, with an optional character from the second column. Note that the *Functional Variable* is based upon ISA 5.1.

S is the optional *Suffix*, which can be any short designation appropriate to represent the specific signal. Ideally the suffix will be four characters or less. The *Suffix* is separated from the *Functional Variable* via an underscore.

Examples:

MT-G6231	Moisture signal of MT-G6231
FT-S5122.P	Pressure signal of differential pressure based flow transmitter FT-S5122.
FT-S5122.F	Flow signal of multivariable transmitter FT-S5122.
FT-S5122.T	Temperature signal of multivariable transmitter FT-S5122.
FV-G6821.Z	Position of damper FV-G6821.
PDT-G4231.P_H	High side pressure of differential pressure transmitter PDT-G4231.
PDT-G4231.P_L	Low side pressure of differential pressure transmitter PDT-G4231.
PDT-G4231.PD	Differential pressure of differential pressure transmitter PDT-G4231.
TT-M613	TT-M613 temperature signal

7.8.5 Analog Output Signals

Identification of analog control system software I/O and signal tags, where the source of the signal is a controller such as a PLC, will be as follows:

E*	**.**	**Cmd**	**F**	**-**	**S**
Controlled Equipment / Instrument Identifier	.	Output Designation	Functional Variable	-	Suffix (Optional)

Where,

E* is the *Controlled Equipment* / *Instrument Identifier*, based upon other parts of this document. The *Controlled Equipment* / *Instrument Identifier* should be the ultimate controlled equipment.

Cmd Is the *Output Designation*, utilized to identify all outputs signals.

F is the *Functional Variable*, which represents the type of analog signal. The *Functional Variable* shall be based on the first column of Table 7-1, with an optional character from the second column. Note that the *Functional Variable* is based upon ISA 5.1 and in this case will represent the specific output signal, not necessarily the loop identification.

S is the optional *Suffix*, which can be any short designation appropriate to represent the specific signal. Ideally the suffix will be four characters or less. The *Suffix* is separated from the *Functional Variable* via an underscore.

Examples:

FV-M2151.CmdZ Valve position command signal from flow indicating controller FIC-M2151. Note that while the control loop is based on flow, the specific signal is a Z, driving the valve position.

P-M210.CmdS Pump speed command signal. Note that the pump is the ultimate controlled equipment and not the variable speed drive.

BLR-B610.CmdT Boiler temperature command signal. This would be appropriate when the destination of this signal is a boiler that has an integral dedicated controller.

HCE-B619.CmdJ Power command signal (in % of full power) to an electric heating coil controller. In the event that the signal represented a specific temperature setpoint, then the *Functional Variable* would be a T.

TC-B610.CmdT Temperature command / setpoint signal to an external temperature controller TC-B610.

TV-G6822.CmdZ Temperature valve position command signal.

7.8.6 Control System Software Implementation

Where a control system software implementation does not support the use of the "." character used in the signal identification, it is recommended to replace the period "." character with an underscore ("_"). For example:

P-G101.Flt would become P-G101_Flt

8 COMMUNICATION EQUIPMENT

8.1 Identifier Format

The identification format for communication equipment is as follows.

FFFF	**-**	**EEEE**	**-**	**A**	**NN(N)(N)**	**-**	**S**
Facility Code (Optional)	-	Equipment Functional Designation	-	Area Code	Equipment Number	-	Suffix (Optional)

Where,

FFFF	is the *Facility Code*, from Appendix A. The *Facility Code* will typically be implied, and would only be fully written where required.
EEEE	is the *Equipment Functional Designation*, which is comprised of 2 to 4 characters from Section 8.2.
A	is the *Area Code*, which is based on Section 2.3.
NN(N)(N)	is the *Equipment Number*. Select numbers consistent with the ranges in Appendix D.
S	is the Suffix, an optional numeric or letter code to distinguish between multiple pieces of equipment with a common equipment number. Generally, numbers are utilized for equipment in series, and letters for equipment in parallel.

Examples:

NSW-G901	An Ethernet switch located in the G area.
JBN-G110	A networking junction box associated with pump P-G110.
NJ-G901-1	A networking jack associated with NSW-G901.

8.2 Functional Designations

Table 8-1 : Communication Equipment Functional Designations

Functional Designation	Description	Notes
ANT	Antenna	
CN	Network Cable	
CNP	Network Cable - Patch	
JBN	Junction Box - Network	
MDM	Modem	
NAP	Network Access Point	
ND	Network Device	Utilize for general devices not otherwise in list. Example: network terminators
NFW	Network Firewall	
NGW	Network Gateway	
NJ	Network Jack	
NJT	Network Jack – Telephone	
NMC	Network Media Converter	
NP	Networking Panel / Cabinet	
NPP	Networking Patch Panel	
NRD	Network Radio	
NRP	Network Repeater	
NRT	Network Router	
NSP	Network Segment Protector	Typically used for PROFIBUS PA
NSW	Network Switch, Ethernet	
NT	Network Terminator	

Notes:

1. *Avoid overlap of Communication Equipment Functional Designations with Electrical, Mechanical, and Automation Functional Designations*

8.3 Network Cables

The identification format for network cables is as follows.

CN	**-**	**A**	**NN(N)(N)**	**-**	**S**
Cable Designation	-	Area Code	Equipment Number of Associated Equipment	-	Suffix (Optional)

Where,

CN — is the *Cable Designation*, which for network cables is comprised of the letters CN.

A — is the *Area Code*, which is based on Section 2.3.

NN(N)(N) — is the *Equipment Number* of the associated equipment. Where the cable connects two pieces of equipment, identify by the downstream, or serviced piece of equipment.

S — is the *Suffix* utilized to identify the specific cable associated with the equipment. The Suffix is not required if a single cable is associated with the equipment. Utilize sequential numbers for cables in series, or for different purposes, and letters for cables in parallel. Utilize the letter T to designate tie connections.

Examples:

CN-G901-1 — An uplink network cable for NSW-G901.

CN-M2531 — A network cable that connects level transmitter LT-M2531.

CN-M801 — A network cable that connects PLC-M801 to NSW-M910.

This page is intentionally blank.

Appendix A Facility Codes

The Facility Codes have been moved into a separate Facility Codes standard document, managed by the Asset Management Branch.

This page is intentionally blank.

Appendix B Facility Area Codes

Area Codes – Shoal Lake Intake Facility

Area Code	Description
A	General or area code is not applicable
C	Chlorine Area
D	Dechlorination Building
E	Engine Shed
H	Electrical Shed
G	Gatehouse
P	Pumphouse (including Electrical & Control Room)
R	Residences
S	Staff Houses

Area Codes – Shoal Lake Aqueduct

Area Code	Description
A	Aqueduct and Related Small Facilities including Boathouses and RTU Sites
R	GWWD Railway

Area Codes – Water Treatment Plant

Area Code	Description
A	Administration
B	Main Treatment Plant Building
C	Chemical Feed Systems (Polymer, SBS, Hydrogen Peroxide)
D	Deacon Booster Pumping Station (includes Ultraviolet Light Disinfection)
E	Electrical Substation
F	Filtration
G	Standby Power Generation
H	Plant Utilities
I	Inlet Works and Raw Water Pumping
J	Hypochlorite Generation and Feed Building
K	Enclosed Bridge
L	Dewatering Cells (Freeze Thaw Pond) / Forcemain
M	General Plant Services / Miscellaneous (incl. Fire Pump Room and Electrical Room)
N	Aqueduct Bridges
O	Ozone
P	Flocculation and DAF
R	Residuals Handling
S	Bulk Chemical Storage and Feed Building
T	Treatment Water Storage (Clearwell)
U	*Future*
V	Civil Maintenance and Aqueduct Storage Building
W	*Future*
X	Pilot Plant
Y	Yard Piping and Valve Chamber
Z	Deacon Chemical Feed Building

Note: The current application of area codes does not meet the intent of this standard, in that it is not based upon a physical location. For example, the H area code is for all plant utilities across the entire building.

Area Codes – Regional Water Pumping Stations

Area Code	Description
A	General or area code is not applicable
B	Collections Building (McPhillips only)
C	Chlorine Building / Area
M	Main Pumping Station Building
R	Reservoir
S	Control Centre Building (McPhillips Only)
Y	Yard Piping and Valve Chambers

Area Codes – Wastewater Collections

Area Code	Description
A	General or area code is not applicable
F	Flood Pumping Stations
L	Wastewater Lift Stations
S	Sewer

Area Codes – Land Drainage

Area Code	Description
A	General or area code is not applicable
B	Storm Retention Basin (SRB)
L	Pumping Station
U	Underpass Pumping Station
W	Deep Well Pump

Area Codes – NEWPCC

Area Code	Description
A	General or area code is not applicable
B	Boilers
C	Centrate Treatment
D	Digesters
E	Electrical Building and Substation
F	Phosphorous Removal Facility
G	Pre-Aeration and Grit Removal
H	*HOLD – Potentially reserve for Headworks area code. Decision to be made under the sewage treatment upgrade program.*
M	Main Building
P	Primary Clarifiers
R	Oxygen Reactors
S	Secondary Clarifiers
U	UV Disinfection Facility
W	Sludge Dewatering
X	Leachate Receiving Facility
Y	Hauled Wastewater Receiving Facility

Notes:

1. The NEWPCC area codes will be updated as part of the NEWPCC Upgrade project.

Area Codes – SEWPCC

Area Code	Description
A	General or area code is not applicable
B	Service Building (includes Boilers and Storage Building)
C	Chemical / Electrical Building
D	Fermenters / Sludge Thickeners
G	Headworks
K	High-Rate Clarification Building
M	Administration Building
P	Primary Clarifiers
R	BioReactors / Blower Building
S	Secondary Clarifiers
T	Biofilter / Odour Control
U	UV Disinfection Building
Y	Yard / Electrical Substation

Area Codes – WEWPCC

Area Code	Description
A	General or area code is not applicable
F	Primary Sludge Fermenters
H	Headworks
L	General and Site Works
M	Perimeter Road Pumping Station
P	Primary Clarifiers
S	Secondary Clarifiers and BioReactors
T	DAF (Dissolved Air Flotation) Thickeners
U	Utility Building HOLD – Possible re-allocation for future UV Disinfection
V	HOLD – Possible re-allocation as the Utility Building. (See Note 1)
Y	*HOLD – Possible use for Yard. Decision to be made under the sewage treatment upgrade program.*
Z	Ponds, Effluent and Outfall

Notes:

1. *Some equipment in the WEWPCC Utility Building has already been re-identified as V.*

Area Codes – Solid Waste

Area Code	Description
A	General or area code is not applicable
B	Biosolids and LYW Composting

Appendix C Master Equipment Functional Designations

Functional Designation	Description	Type	Notes
ACP	Access Control Panel	Security	
ACU	Air Conditioning Unit	Mechanical	
AD	Air Dryer	Mechanical	
ADP	Automation Device Panel	Automation	
AF	Aeration Fan	Mechanical	
AG	Agitator	Mechanical	
AHU	Air Handling Unit	Mechanical	Includes Make-Up Air Units
ANT	Antenna	Communication	
ATS	Automatic Transfer Switch	Electrical	
B	Blower	Mechanical	
BAT	Battery	Electrical	
BC	Battery Charger	Electrical	
BD	Balance Damper	Mechanical	See Section 4.3.
BDD	Backdraft Damper	Mechanical	
BFP	Back Flow Preventer	Mechanical	
BLR	Boiler	Mechanical	
~~BS~~	~~Bar Screen~~	~~Mechanical~~	Use SCR
BV	Balancing Valve	Mechanical	Manual mechanical balancing valve (not typically adjusted by operations). See Section 5.2.3
BVA	Balancing Valve Automatic	Mechanical	Automatic mechanical balancing valve. See Section 5.2.3
BUS	Busway	Electrical	
C	Cable (Power)	Electrical	
CA	Cable (Automation)	Automation	
CAL	Calibration Column	Mechanical	
CAP	Capacitor	Electrical	Typically individual unit. See PFC.
CB	Circuit Breaker	Electrical	Includes air, vacuum, SF6, and moulded case circuit breakers
CBUS	Cable Bus	Electrical	
CC	Cooling Coil	Mechanical	
CDR	Condensor	Mechanical	
CE	Centrifuge	Mechanical	
CHLR	Chiller	Mechanical	
CM	Clarifier Mechanism	Mechanical	
CMP	Compressor	Mechanical	

Functional Designation	Description	Type	Notes
CN	Network Cable	Communication	
CNP	Network Cable - Patch	Communication	
CNV	Conveyor	Mechanical	Includes skimmers
CON	Contactor	Electrical	
CP	Control Panel	Electrical	
CP	Control Panel	Automation	
CPR	Cathodic Protection Rectifier	Electrical	
CRN	Crane	Mechanical	
CS	Computer Server	Automation	
CSTE	Customer Service Termination Equipment	Electrical	
CT	Cooling Tower	Mechanical	
CU	Condensing Unit	Mechanical	
CV	Check Valve	Mechanical	
CW	Computer Workstation - General	Automation	
CWD	Computer Workstation - Development	Automation	
CWO	Computer Workstation - Operator	Automation	
CYC	Cyclone	Mechanical	
DCS	Distributed Control System	Automation	
DP	Distribution Panel	Electrical	
DS	Disconnect Switch (non-fusible)	Electrical	
EDP	Electrical Device Panel	Electrical	Use for metering panels, protection panels and other miscellaneous electrical panels.
EDU	Eductor	Mechanical	
EF	Exhaust Fan	Mechanical	
ELB	Emergency Lighting Battery Pack	Electrical	May have integrated lights.
F	Fan - General	Mechanical	
FA	Flame Arrestor	Mechanical	
FAAP	Fire Alarm Annnunciator Panel	Electrical	
FACP	Fire Alarm Control Panel	Electrical	
FAS	Fire Alarm System	Electrical	
FC	Fan Coil	Mechanical	

Functional Designation	Description	Type	Notes
FD	Fire Damper	Mechanical	Utilize same equipment number as air handler.
FDP	Field Device Panel	Automation	
FDR	Feeder	Mechanical	Examples: screw feeder, chlorinator, glycol make-up unit
FDS	Fusible Disconnect Switch	Electrical	
FEX	Fire Extinguisher	Mechanical	
FG	Flap Gate	Mechanical	
FIL	Filter	Mechanical	
FU	Fuse	Electrical	
GDC	Gas Detection Controller	Automation	
GEN	Generator	Electrical	
GR	Grille / Louvre – General	Mechanical	See Section 4.3.
GRD	Grille – Diffuser	Mechanical	See Section 4.3.
HC	Heating Coil	Mechanical	
HCC	Heater Coil Controller	Electrical	Includes SCR and contactor based controllers.
HCE	Heating Coil, Electric	Mechanical	Duct based
HE	Heat Exchanger	Mechanical	
HF	Harmonic Filter	Electrical	
HMI	Standalone Human Machine Interface (HMI) Terminal	Automation	
HO	Hoist	Mechanical	
HOP	Hopper	Mechanical	
HP	Heat Pump	Mechanical	
HRC	Heat Recovery Coil	Mechanical	
HTR	Heater	Mechanical	General heaters, radiant, convectors, etc.
HUM	Humidifier	Mechanical	
HV	Hand/Manual Valve	Mechanical	See Section 5.2
INJ	Injector	Mechanical	
INV	Inverter	Electrical	
ISB	Intrinsic Safety Barrier	Automation	Typically only a subcomponent.
JB	Junction Box	Electrical	
JBA	Junction Box (Automation)	Automation	
JBN	Junction Box - Network	Communication	
K	Interlocking Key (Kirk Key)	Electrical	
LC	Lighting Contactor	Electrical	A lighting control panelboard would be identified as a PNL.

Functional Designation	Description	Type	Notes
LCP	Local Control Panel	Automation	
LDB	Load Bank	Electrical	
MCC	Motor Control Centre	Electrical	
MCP	Motor Circuit Protector	Electrical	
MCS	Moulded Case Switch	Electrical	
MDM	Modem	Communication	
MMS	Manual Motor Starter	Electrical	
MS	Motor Starter	Electrical	
MSP	Motor Starter Panel	Electrical	
MTR	Motor	Electrical	
MTS	Manual Transfer Switch	Electrical	
MXR	Mixer	Mechanical	
NAP	Network Access Point (Wireless)	Communication	
ND	Network Device	Communication	Utilize for general devices not otherwise in list. Example: network terminators
NFW	Network Firewall	Communication	
NGR	Neutral Grounding Resistor	Electrical	
NGW	Network Gateway	Communication	
NJ	Network Jack	Communication	
NJT	Network Jack - Telephone	Communication	
NMC	Network Media Converter	Communication	
NP	Networking Panel	Communication	
NRA	Network Radio	Communication	
NRP	Network Repeater	Communication	
NRT	Network Router	Communication	
NSP	Network Segment Protector	Communication	Typically used for PROFIBUS PA
NSW	Network Switch, Ethernet	Communication	
NT	Network Terminator	Communication	
OD	Overhead Door	Mechanical	
P	Pump	Mechanical	
PB	Pull Box	Electrical	
PCV	Pressure Control Valve (Pressure Regulator)	Mechanical	See Section 5.2.3
PFC	Power Factor Correction Unit	Electrical	Bank of capacitors. May contain reactors.

Functional Designation	Description	Type	Notes
PLC	Programmable Logic Controller	Automation	
PM	Power Meter	Electrical	
PNL	Panelboard	Electrical	
PRN	Printer	Automation	
PS	Power Supply	Electrical	24VDC power supply
PSP	Power Supply Panel	Electrical	Panel containing 24VDC power supplies, fire alarm booster power supply
PSV	Pressure Safety/Relief Valve	Mechanical	See Section 5.2.3
R	Reactor (various processes)	Mechanical	
RCFR	Rectifier	Electrical	
RCPT	Receptacle	Electrical	
RCTR	Reactor	Electrical	
RDT	Rotary Drum Thickener	Mechanical	
RES	Reservoir	Mechanical	Large water containment structure.
RIO	Remote I/O	Automation	
RLY	Protection Relay	Electrical	
RTU	Remote Terminal Unit	Automation	
S	Skid Package	Mechanical	
SA	Sampler	Mechanical	
SCBR	Scrubber	Mechanical	
SCP	Security Control Panel	Security	
SCR	Screen	Mechanical	Utilized for screening systems such as bar screens and perforated plate screens.
SD	Smoke Damper	Mechanical	Utilize same equipment number as air handler.
SF	Supply Fan	Mechanical	
SGR	Switchgear	Electrical	
SL	Stop Logs	Mechanical	
SLG	Sluice Gate	Mechanical	May only be utilized within existing facilities where the use of the SLG identifier is well established. The designation may not to be utilized for new or upgraded WSTP facilities. Identify as a valve (HV, XV, FV, etc).
SPL	Splitter	Electrical	
SS	Soft Starter	Electrical	

Functional Designation	Description	Type	Notes
STR	Strainer	Mechanical	See Section 5.2
SVM	Security Video Monitor	Security	
SVR	Security Video Recorder	Security	
SW	Switch	Electrical	
TB	Terminal Block	Automation	Subcomponent Only
TBC	Travelling Bridge Collector	Mechanical	
TK	Tank	Mechanical	
TU	Terminal Unit	Mechanical	Includes CAV/VAV/Dual Duct boxes. Dampers to be identified as per Section 7.1 – Instrumentation.
TVSS	Transient Voltage Surge Suppressor	Electrical	
U	Miscellaneous Equipment Not In List	Mechanical / Electrical / Automation	Example: Water Softener
UH	Unit Heater	Mechanical	
UPS	Uninterruptible Power Supply	Electrical	
UVR	Ultra-Violet (UV) Reactor	Mechanical	
V	Vessel, Pressure Vessel	Mechanical	e.g. air receiver, glycol expansion tank
VFD	Variable Frequency Drive	Electrical	
W	Weir	Mechanical	
WCP	Washer / Compactor	Mechanical	
WGB	Waste Gas Burner	Mechanical	
XFMR	Transformer	Electrical	

Appendix D Equipment Number Ranges

Equipment Number Ranges – Shoal Lake Intake Facility

Area Code	Range	Description
All Areas	001 - 049	Major Pumping
	050 - 099	Future
	100 – 499	Process Equipment
	500 – 599	Misc Building Equipment – Air Compressors, Sump Pumps, Fuel Systems, etc.
	600 - 699	HVAC Equipment
	700 - 799	Electrical Equipment
	800 – 899	Automation Equipment
	900 – 999	Misc, including communication and security

Equipment Number Ranges – Shoal Lake Aqueduct

Area Code	Range	Description
All Areas	TBD	Needs to be developed.

Equipment Number Ranges – Water Treatment Plant

Area Code	Range	Description
C – Chemical Feed	001 - 099	Process – Polymer
	100 – 899	Process – Future
	700-799	Electrical Equipment
	800 – 999	Chemical Systems
	900 – 949	Chemical Systems – Hydrogen Peroxide
	950 – 979	Chemical Systems – Sodium Bisulphite
D - Deacon Booster Pumping Station	001 - 049	Major Pumping
	050 - 099	Future
	100 - 499	Process Equipment
	500 – 599	Misc Building Equipment – Air Compressors, Sump Pumps, etc.
	600 – 699	HVAC
	700-799	Electrical Equipment
	800-899	Automation Equipment
	900 – 999	Misc, including communication and security
F - Filtration	001 – 999	Process
H – Plant Utilities	001 - 099	HVAC
	100 - 199	Fire Pumps
	200 - 299	Auxiliary Building HVAC
	300 - 399	Building Safety and Security
	400 - 499	Process Pumps
	500 - 599	Sanitary Sumps
	600 - 699	Electrical Distribution
	700 - 799	Potable Water
	800 - 899	Unallocated
	900 - 950	Emergency Generator
	951 - 999	Electrical Substation
I – Inlet and Raw Water	001 - 999	Process
J – On-Site Hypochlorite Generation	001 - 999	Process
L – Freeze Thaw Pond	001 - 999	Process
O - Ozone	001 - 999	Process
P – Flocculation and DAF	001 - 999	Process
R – Residuals Handling	001 - 999	Process
S – Bulk Chemical Storage	001 - 999	Process
T – Treated Water Storage and Handling (Clearwell)	001 - 999	Process
U – Ultraviolet Light Disinfection	001 - 999	Process

Area Code	Range	Description
X – Pilot Plant	001 - 999	Process
Y – Yard Piping and Valve Chambers	001 - 099	Surge Towers
	100 - 199	Yard Piping
	200 - 299	Yard Lighting
Z – Deacon Chemical Feed Building	001 – 099	Process Equipment
	100 - 199	Chemical Systems – Hydrofluosilicic Acid
	200 - 299	Chemical Systems – Phosphoric Acid
	300 - 499	Process Equipment
	500 - 599	Misc Building Equipment – Air Compressors, Sump Pumps, etc.
	600 - 699	HVAC
	700 - 799	Electrical Equipment
	800 - 899	Automation Equipment
	900 - 999	Misc, including communication and security

Note: The above WTP process ranges are largely based upon existing designations. In the event of future significant upgrades, some realignment may be required to fully align with this standard.

Equipment Number Ranges – Regional Water Pumping Stations

Area Code	Range	Description
All Area Codes	001 - 049	Major Pumping
	050 - 099	Future
	100 – 499	Process Equipment
	500 – 599	Misc Building Equipment – Air Compressors, Sump Pumps, etc.
	600 - 699	HVAC Equipment
	700 - 799	Electrical Equipment
	800 – 899	Automation Equipment
	900 – 999	Misc, including communication and security

Equipment Number Ranges – Collections Facilities

Area Code	Range	Description
L – Wastewater Lift Stations or F – Flood Pumping Station or U – Underpass Pumping Station	01 – 49	Reserved for Process Equipment
	01 - 09	Pumps
	10 – 19	Wet Well / Intake Equipment
	20 - 39	Misc Process
	40 - 49	Discharge / Forcemain
	50 - 59	Misc Building Equipment – Air Compressors, Backflow Preventer, etc.
	60 - 69	HVAC Equipment
	70 - 79	Electrical Equipment
	80 – 89	Automation Equipment
	90 - 99	Misc, including communication and security
S – Sewer	01 – 79	Sewer – Misc.
	80 - 89	Sewer – Before Outfall
	90 - 99	Sewer - Outfall

Note: The Collections facilities utilize two digit equipment numbers due to the limited amount of equipment located within each facility. Instrumentation loop numbers within Collections facilities have three digits.

Equipment Number Ranges – SEWPCC and WEWPCC Wastewater Treatment Facilities

Area Code	Range	Process Code	Description
All Area Codes	001 - 099	0	Area Specific Processes
	100 – 199	1	Area Specific Processes
	200 – 299	2	Area Specific Processes
	300 – 399	3	Area Specific Processes
	400 – 499	4	Area Specific Processes
	500 – 599	5	Misc. Building Equipment – Air Compressors, Backflow Preventer, etc. (May be allocated for process as required)
	600 - 699	6	HVAC Equipment
	700 - 799	7	Electrical Equipment
	800 – 899	8	Automation Equipment
	900 – 999	9	Misc., including communication and security

Note: Refer to the IMS for further definition of Equipment Number ranges and Process Codes within the Wastewater Treatment Facilities.

Equipment Number Ranges – NEWPCC Wastewater Treatment Facility

Area Code	Range	Process Code	Description
All Area Codes	0001 - 0999	0	Area Specific Processes
	1000 – 1999	1	Area Specific Processes
	2000 – 2999	2	Area Specific Processes
	3000 – 3999	3	Area Specific Processes
	4000 – 4999	4	Area Specific Processes
	5000 – 5999	5	Misc. Building Equipment – Air Compressors, Backflow Preventer, etc. (May be allocated for process as required)
	6000 – 6999	6	HVAC Equipment
	7000 – 7999	7	Electrical Equipment
	8000 – 8999	8	Automation Equipment
	9000 – 9999	9	Misc., including communication and security

Note: Refer to the IMS for further definition of Equipment Number ranges and Process Codes within the Wastewater Treatment Facilities.

Appendix E Sample Drawings

The following process and instrumentation diagram drawings were created as sample drawings.

South End Water Pollution Control Centre

City Drawing Number	Sheet	Rev	Project / Area	TITLE
1-0102A-SK01	001	00		PROCESS & INSTRUMENTATION DIAGRAM, LEGEND AND DETAILS
1-0102A-SK01	002	00		PROCESS & INSTRUMENTATION DIAGRAM, LEGEND AND DETAILS
1-0102A-SK01	003	00		PROCESS & INSTRUMENTATION DIAGRAM, LEGEND AND DETAILS
1-0102S-SK02	001	00	SECONDARY CLARIFIERS	PROCESS & INSTRUMENTATION DIAGRAM, CLARIFIER 1, PROPOSED IDENTIFICATION
1-0102S-SK03	001	00	SECONDARY CLARIFIERS	PROCESS & INSTRUMENTATION DIAGRAM, CLARIFIER 2, PROPOSED IDENTIFICATION
1-0102S-SK04	001	00	SECONDARY CLARIFIERS	PROCESS & INSTRUMENTATION DIAGRAM, CLARIFIER 3, PROPOSED IDENTIFICATION
1-0102S-SK05	001	00	SECONDARY CLARIFIERS	PROCESS & INSTRUMENTATION DIAGRAM, SECONDARY CLARIFIER EFFLUENT & SAMPLE SYSTEM, PROPOSED IDENTIFICATION
1-0102S-SK06	001	00	SECONDARY CLARIFIERS	PROCESS & INSTRUMENTATION DIAGRAM, RETRUN ACTIVATED SLUDGE PUMP P-S101, PROPOSED IDENTIFICATION
1-0102S-SK07	001	00	SECONDARY CLARIFIERS	PROCESS & INSTRUMENTATION DIAGRAM, REPURN ACTIVATED SLUDGE PUMPS P-S102 & P-S103, PROPOSED IDENTIFICATION
1-0102S-SK08	001	00	SECONDARY CLARIFIERS	PROCESS & INSTRUMENTATION DIAGRAM, REPURN ACTIVATED SLUDGE PUMPS P-S108 & P-S109, PROPOSED IDENTIFICATION
1-0102S-SK09	001	00	SECONDARY CLARIFIERS	PROCESS & INSTRUMENTATION DIAGRAM, RAS HEADER, PROPOSED IDENTIFICATION
1-0102S-SK10	001	00	SECONDARY CLARIFIERS	PROCESS & INSTRUMENTATION DIAGRAM, WASTE ACTIVATED SLUDGE PUMPS P-S202 & P-S203, PROPOSED IDENTIFICATION

Marion Wastewater Pumping Station

City Drawing Number	Sheet	Rev	Project / Area	TITLE
1-0159L-SK01	001	00		PROCESS & INSTRUMENTATION DIAGRAM, WASTEWATER PUMPING
1-0159L-SK02	001	00		PROCESS & INSTRUMENTATION DIAGRAM, VENTILATION

MacLean Water Pumping Station

City Drawing Number	Sheet	Rev	Project / Area	TITLE
1-0630A-SK01	001	00		PROCESS & INSTRUMENTATION DIAGRAM, LEGEND & DETAILS
1-0630A-SK01	002	00		PROCESS & INSTRUMENTATION DIAGRAM, LEGEND & DETAILS
1-0630A-SK01	003	00		PROCESS & INSTRUMENTATION DIAGRAM, LEGEND & DETAILS
1-0630C-SK01	001	00		PROCESS & INSTRUMENTATION DIAGRAM, CHLORINE CYLINDER SHUTOFF VALVES

City Drawing Number	Sheet	Rev	Project / Area	TITLE
1-0630C-SK02	001	00		PROCESS & INSTRUMENTATION DIAGRAM, CHLORINATION SYSTEM
1-0630M-SK02	001	00		PROCESS & INSTRUMENTATION DIAGRAM, SUCTION HEADER
1-0630M-SK03	001	00		PROCESS & INSTRUMENTATION DIAGRAM, PUMP P-M021
1-0630M-SK04	001	00		PROCESS & INSTRUMENTATION DIAGRAM, PUMP P-M022
1-0630M-SK05	001	00		PROCESS & INSTRUMENTATION DIAGRAM, PUMP P-M023
1-0630M-SK07	001	00		PROCESS & INSTRUMENTATION DIAGRAM, PUMP P-M025
1-0630M-SK08	001	00		PROCESS & INSTRUMENTATION DIAGRAM, PUMP P-M026
1-0630M-SK09	001	00		PROCESS & INSTRUMENTATION DIAGRAM, DISCHARGE HEADER
1-0630M-SK10	001	00		PROCESS & INSTRUMENTATION DIAGRAM, COMPRESSED AIR SYSTEM
1-0630M-SK11	001	00		PROCESS & INSTRUMENTATION DIAGRAM, GEN-M751 & GEN-M752
1-0630M-SK12	001	00		PROCESS & INSTRUMENTATION DIAGRAM, MISCELLANEOUS
1-0630R-SK01	001	00		PROCESS & INSTRUMENTATION DIAGRAM, RESERVOIR FILL VALVES
1-0630R-SK02	001	00		PROCESS & INSTRUMENTATION DIAGRAM, RESERVOIR CELLS
1-0630Y-SK01	001	00		PROCESS & INSTRUMENTATION DIAGRAM, DISCHARGE TO FEEDERMAINS

A1 SIZE – 594mm x 841mm

VALVE SYMBOLS

- GENERIC/GATE VALVE
- BUTTERFLY
- BALL
- GLOBE
- NEEDLE
- ANGLE VALVE
- THREE WAY VALVE
- FOUR WAY VALVE (ARROWS INDICATE FAILURE OR UNACTUATED FLOW PATH)
- CHECK
- STOP CHECK
- AIR ASSISTED CHECK
- SPRING OPERATED CHECK
- COCK VALVE
- QUICK CONNECT AIR HOSE COUPLING
- PLUG VALVE
- AUTOMATIC FLOW CONTROL VALVE
- DIAPHRAGM VALVE
- ECCENTRIC PLUG VALVE
- PINCH VALVE
- BALANCING VALVE
- ECCENTRIC ROTARY DISC VALVE
- GENERIC DAMPER/LOUVRE
- PARALLEL BLADE DAMPER/LOUVRE
- OPPOSED BLADE DAMPER/LOUVRE

ACTUATOR SYMBOLS

- DIAPHRAGM OPERATED
- BALANCED DIAPHRAGM
- DIAPHRAGM OPERATED WITH POSITIONER
- DIAPHRAGM OPERATED WITH POSITIONER, FAIL CLOSE
- DIAPHRAGM OPERATED WITH POSITIONER, FAIL OPEN
- DIAPHRAGM OPERATED WITH HAND ADJUSTMENT, FAIL CLOSE
- PRESSURE REGULATOR, SELF CONTAINED
- BACK PRESSURE REGULATOR, SELF CONTAINED
- PRESSURE REGULATOR, SELF CONTAINED WITH HAND ADJUSTMENT
- PRESSURE REGULATOR, EXTERNAL TAP
- BACK PRESSURE REGULATOR, EXTERNAL TAP
- M — MOTOR OPERATED
- HAND OPERATED
- CYLINDER OPERATED
- CYLINDER OPERATED WITH POSITIONER
- DOUBLE ACTING CYLINDER
- PRESSURE RELIEF OR SAFETY
- VACUUM RELIEF
- TEMPERATURE SAFETY VALVE
- FLOAT LEVEL VALVE

INSTRUMENT LINE SYMBOLS

- INSTRUMENT SUPPLY OR CONNECTION TO PROCESS
- PNEUMATIC SIGNAL
- ELECTRIC SIGNAL
- HYDRAULIC SIGNAL
- CAPILLARY TUBE
- ELECTROMAGNETIC OR SONIC SIGNAL GUIDED
- ELECTROMAGNETIC OR SONIC SIGNAL UNGUIDED
- DATA / SERIAL LINK (OPTIONAL)

CONNECTING ARROWS

- 1-0102M-A0001 — PROCESS/SIGNAL CONTINUATION ON INDICATED DRAWING
- A — A — SIGNAL CONTINUATION ON SAME DRAWING

GATE SYMBOLS

- SLIDE GATE (N.C.)
- SLIDE GATE (N.O.)
- WEIR GATE
- STOP LOG (N.C.)
- OR
- STOP LOG (N.O.)
- SLUICE GATE
- FLAP GATE

INSTRUMENT SYMBOLS

- DISCRETE INSTRUMENTS FIELD MOUNTED
- DISCRETE INSTRUMENTS PRIMARY LOCATION (CONTROL ROOM) FRONT PANEL MOUNTED
- DISCRETE INSTRUMENTS PRIMARY LOCATION (CONTROL ROOM) REAR PANEL MOUNTED
- DISCRETE INSTRUMENTS SECONDARY LOCATION (NORMALLY ACCESSIBLE) FRONT PANEL MOUNTED
- DISCRETE INSTRUMENTS SECONDARY LOCATION (NORMALLY ACCESSIBLE) REAR PANEL MOUNTED
- PRIMARY CONTROL SYSTEM FUNCTION
- SECONDARY OR SAFETY CONTROL SYSTEM FUNCTION PRIMARY LOCATION DATA ACCESSIBLE TO OPERATOR
- SECONDARY OR SAFETY CONTROL SYSTEM FUNCTION AUXILIARY LOCATION DATA NOT ACCESSIBLE TO OPERATOR
- SECONDARY OR SAFETY CONTROL SYSTEM FUNCTION AUXILIARY LOCATION DATA NOT ACCESSIBLE TO OPERATOR
- OTHER COMPUTER FUNCTION
- SUBCOMPONENT OR DISCRETE INSTRUMENTS FIELD MOUNTED NO LOOP IDENTIFIER
- R — PILOT LIGHT (FIELD)
- R — PILOT LIGHT (CONTROL ROOM)
- R — PILOT LIGHT (FIELD PANEL)
- R — PILOT LIGHT (FIELD PANEL, REAR MOUNTED)

W =
R = RED
G = GREEN
A = AMBER
B = BLUE
Y = YELLOW
WHITE

- FC — HH, H, L, LL — PROCESS VARIABLE ALARMS
- I — INTERLOCK
- R — RESET

ACCESSORY DEVICE SYMBOLS

- ORIFICE PLATE
- FLANGE
- PIPE REDUCER
- BACKDRAFT DAMPER
- PUMP
- BLOWER / FAN
- MOTOR
- DRAIN
- UNION
- TE — TEMPERATURE ELEMENT WITH THERMOWELL
- SCREWED CAP
- HOSE CONNECTION
- BLIND FLANGE
- FILTER
- EXPANSION JOINT
- VENTURI TUBE
- SINGLE PORT PITOT TUBE
- AVERAGING PITOT TUBE
- MIX TEE
- VARIABLE AREA FLOW INDICATOR (ROTAMETER)
- VORTEX FLOW METER
- DUPLEX STRAINER
- MIXER
- FLOW NOZZLE
- AIR INTAKE / RELEASE
- DIAPHRAGM SEAL
- AIR VENT
- HEAT TRACING
- HEAT EXCHANGER
- C/C — COOLING COIL
- D/X — DIRECT EXPANSION (EVAPORATOR)
- H/C — HEATING COIL
- E/C — ELECTRIC HEATING COIL
- CONDENSOR
- T — TRAP
- S — S-TRAP PRESSURE RELIEF
- VENT TO ATMOSPHERE
- FCV — FLOW CONTROL VALVE RESTRICTED FLOW LEFT FREE FLOW RIGHT
- FLAME ARRESTER
- PRESSURE ARRESTER
- FLEX PIPE
- HOSE REEL
- LOW LIMIT
- STRAINER
- AIR FILTER
- SEWER VALVE
- HVAC DUAL DUCT TERMINAL UNIT
- RUPTURE DISC FOR PRESSURE RELIEF
- RUPTURE DISC FOR VACUUM RELIEF
- EDUCTOR
- R/C — REHEAT COIL
- ΔT — THERMAL DISPERSION FLOW METER
- M — MAGNETIC FLOW METER
- E/P — VOLTAGE / PNEUMATIC RELAY
- E/I — VOLTAGE / CURRENT RELAY

NOTES:

1. THIS DRAWING WAS CREATED UNDER THE IDENTIFICATION STANDARD PROJECT AS A SAMPLE DRAWING. REFERENCE THE ACTUAL P&ID DRAWINGS FOR THE SEWPCC FACILITY.

DRAWING NUMBER	REFERENCE DRAWINGS

APEGM Certificate of Authorization
SNC-Lavalin Inc.
No. 4489

NO.	REVISIONS	DATE	DESIGN	CHECK
00	ISSUED WITH IDENTIFICATION STANDARD	2013/05/28	CJR	CJR

SNC·LAVALIN

SNC-LAVALIN INC.
148 Nature Park Way
Winnipeg, MB, Canada R3P 0X7
204-786-8080

DESIGNED BY: C. REIMER	CHECKED BY: C. REIMER
DRAWN BY: S. FUNK	APPROVED BY: C. REIMER
SCALE: NTS	RELEASED FOR CONSTRUCTION BY:
DATE: 2013/01/11	DATE:
CONSULTANT NO.:	

ENGINEER'S SEAL

PRELIMINARY
NOT TO BE USED FOR CONSTRUCTION

Winnipeg
THE CITY OF WINNIPEG
WATER AND WASTE DEPARTMENT

SOUTH END WATER POLLUTION CONTROL CENTRE

PROCESS AND INSTRUMENTATION DIAGRAM
LEGEND AND DETAILS

CITY DRAWING NUMBER	SHEET	REV.	SIZE
1-0102A-SK01	001	00	A1

LAST SAVE: 2013/06/03 – 1:54pm
PATH: M:\510276\4ENG\49PRC\DD – General DWG\1-0102A-SK01-001-00.dwg

1-0102A-SK01-001-00.dwg

A1 SIZE – 594mm x 841mm

INSTRUMENT FUNCTIONAL DESIGNATIONS

	FIRST LETTER		SUCCEEDING LETTERS		
	MEASURED OR INITIATING VARIABLE	MODIFIER	READOUT OR PASSIVE FUNCTION	OUTPUT FUNCTION	MODIFIER
A	ANALYSIS		ALARM		
B	BURNER, COMBUSTION				
C	CONDUCTIVITY			CONTROL	CLOSE
D	DENSITY	DIFFERENCE, DIFFERENTIAL			DEVIATION
E	VOLTAGE		SENSOR, PRIMARY ELEMENT		
F	FLOW, FLOW RATE	RATIO			FAILURE/FAULT
G			GLASS, GAUGE VIEWING DEVICE		
H	HAND (MANUAL)				HIGH
I	CURRENT		INDICATE		
J	POWER		SCAN		
K	TIME, SCHEDULE	TIME RATE OF CHANGE		CONTROL STATION	
L	LEVEL		LIGHT		LOW
M	MOISTURE, HUMIDITY				MIDDLE, INTERMEDIATE
N					
O	TORQUE		ORIFICE, RESTRICTION		OPEN
P	PRESSURE		POINT (TEST CONNECTION)		
Q	QUANTITY	INTEGRATE, TOTALIZE	INTEGRATE, TOTALIZE		
R	RADIATION		RECORD		RUN
S	SPEED, FREQUENCY	SAFETY		SWITCH	STOP
T	TEMPERATURE			TRANSMITTER	
U	MULTIVARIABLE		MULTIFUNCTION	MULTIFUNCTION	
V	UNCLASSIFIED			VALVE, DAMPER, LOUVER	
W	WEIGHT, FORCE		WELL, PROBE		
X	UNCLASSIFIED	X AXIS	UNCLASSIFIED	UNCLASSIFIED	UNCLASSIFIED
Y	EVENT, STATE, OR PRESENCE	Y AXIS		AUXILIARY DEVICE	
Z	POSITION, DIMENSION	Z AXIS, SAFETY INSTRUMENTED SYSTEM		DRIVER, ACTUATOR, UNCLASSIFIED FINAL CONTROL ELEMENT	

NOTES FOR INSTRUMENT AND DEVICE IDENTIFICATION TABLE:

1. THE LETTER X IS TO BE DEFINED AT THE TIME OF USE, AND MAY BE USED FOR MULTIPLE DEFINITIONS WHERE NO OTHER LETTER IS APPLICABLE.

COMMON INSTRUMENT FIELD DEVICE IDENTIFIERS

IDENTIFIER	DEFINITION	IDENTIFIER	DEFINITION
AA	ANALYSIS ALARM	PG	PRESSURE GAUGE
AAH	ANALYSIS ALARM – HIGH	PI	PRESSURE INDICATOR
AAHH	ANALYSIS ALARM – HIGH–HIGH	PIC	PRESSURE INDICATING CONTROLLER
AE	ANALYSIS ELEMENT	PIT	PRESSURE INDICATING TRANSMITTER
AIT	ANALYSIS INDICATING TRANSMITTER (ANALYTIC INST.)	PR	PRESSURE RECORDER
AK	ANALYSIS (AMPLER) CONTROL STATION	PS	PRESSURE SWITCH
ASH	ANALYSIS SWITCH – HIGH	PSH	PRESSURE SWITCH HIGH
ASHH	ANALYSIS SWITCH – HIGH–HIGH	PSHH	PRESSURE SWITCH HIGH (2ND STAGE)
AT	ANALYSIS TRANSMITTER (ANALYTIC INST.)	PSL	PRESSURE SWITCH LOW
BK	BURNER CONTROL STATION	PSV	PRESSURE SAFETY VALVE (RELIEF)
BCS	BURNER FLAME SWITCH	PT	PRESSURE TRANSMITTER
DE	DENSITY ELEMENT	PY	PRESSURE RELAY (I/I CONVERTER)
DR	DENSITY RECORDER	SI	SPEED INDICATOR
DT	DENSITY TRANSMITTER	SK	SPEED CONTROL STATION
DX	DENSITY SOURCE (X = SOURCE)	ST	SPEED/VELOCITY TRANSMITTER
EE	VOLTAGE ELEMENT/TRANSFORMER	TE	TEMPERATURE ELEMENT
EG	VOLTAGE VIEWING DEVICE (CAPACITOR VOLTAGE INDICATOR)	TG	TEMPERATURE GAUGE
EI	VOLTAGE INDICATOR	TI	TEMPERATURE INDICATOR
EL	VOLTAGE LIGHT	TIC	TEMPERATURE INDICATING CONTROLLER
ET	VOLTAGE TRANSMITTER	TIT	TEMPERATURE INDICATING TRANSMITTER
FAL	FLOW ALARM LOW	TR	TEMPERATURE RECORDER
FE	FLOW ELEMENT	TS	TEMPERATURE SWITCH
FI	FLOW INDICATOR	TSH	TEMPERATURE SWITCH HIGH
FIC	FLOW INDICATING CONTROLLER	TSL	TEMPERATURE SWITCH LOW
FIT	FLOW INDICATING TRANSMITTER	TT	TEMPERATURE TRANSMITTER
FQI	FLOW TOTALIZING INDICATOR	TV	TEMPERATURE VALVE
FQY	FLOW TOTALIZING/INTEGRATING RELAY	TW	TEMPERATURE THERMOWELL
FR	FLOW RECORDER	TY	TEMPERATURE RELAY (SOLENOID VALVE OR M/P)
FSL	FLOW SWITCH LOW	VE	VIBRATION ELEMENT
FT	FLOW TRANSMITTER	VI	VIBRATION INDICATOR
FV	FLOW VALVE	VIT	VIBRATION INDICATING TRANSMITTER
FZ	FLOW METER ULTRASONIC GENERATOR	VT	VIBRATION TRANSMITTER
GE	GAS ELEMENT	XV	ON/OFF VALVE (TYPICAL)
GS	GAS SWITCH MODULE	YL	STATE INDICATOR
HK	HAND CONTROL STATION	ZI	POSITION INDICATOR
HS	HAND SWITCH	ZS	POSITION SWITCH
HSR	HAND SWITCH – START/RUN	ZSC	POSITION SWITCH CLOSED (LIMIT SWITCH)
HSS	HAND SWITCH – STOP	ZSO	POSITION SWITCH OPEN (LIMIT SWITCH)
HV	HAND VALVE	ZT	POSITION TRANSMITTER
IS	CURRENT SWITCH		
IE	CURRENT ELEMENT/TRANSFORMER		
II	CURRENT INDICATOR		
IY	CURRENT RELAY		
JIT	POWER INDICATING TRANSMITTER		
KY	TIMER RELAY		
LCV	LEVEL CONTROL VALVE		
LE	LEVEL ELEMENT		
LI	LEVEL INDICATOR		
LIC	LEVEL INDICATING CONTROLLER		
LIT	LEVEL INDICATING TRANSMITTER		
LR	LEVEL RECORDER		
LSL	LEVEL SWITCH LOW		
LSH	LEVEL SWITCH HIGH		
LSHL	LEVEL SWITCH HIGH/LOW		
LT	LEVEL TRANSMITTER		
LV	LEVEL VALVE		
LY	LEVEL RELAY (I/I CONVERTER)		
ME	MOISTURE SENSOR		
MT	MOISTURE TRANSMITTER		
OSH	TORQUE SWITCH HIGH		
PCV	PRESSURE CONTROL VALVE		
PE	PRESSURE ELEMENT		

NOTES FOR INSTRUMENT FIELD DEVICE IDENTIFIERS:

1. THE LAST IDENTIFIER LETTER IS IN SOME CASES OPTIONAL (EG. FSL)
2. THIS TABLE IS DERIVED FROM THE INSTRUMENT & DEVICE IDENTIFICATION TABLE, AND IS NOT EXHAUSTIVE.

INSTRUMENT IDENTIFICATION

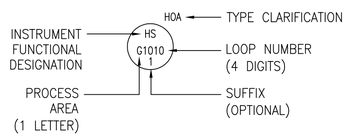

INSTRUMENT TYPE CLARIFICATION

IDENTIFIER	DEFINITION
(N)	N MULTIPLE INSTRUMENTS
AA	AUDIBLE ALARM
ACC	ACCELERATION
A/M	AUTO/MANUAL
C/H	COMPUTER/HAND
C/L	COMPUTER/LOCAL
CLS	CLOSE
C/O	COMPUTER/OFF
COB	COMPUTER/OFF/BYPASS
COH	COMPUTER/OFF/HAND
COT	COMPUTER/OFF/TIME
DCS	DISTRIBUTED CONTROL SYSTEM
DP	DIFFERENTIAL PRESSURE
DS	DECREASE SPEED
E/R	EXTEND/RETRACT
E/S	EMERGENCY STOP
FOR	FORWARD/OFF/REVERSE
H/A	HAND/AUTO
HOA	HAND/OFF/AUTO
HOR	HAND/OFF/REMOTE
I/D	INCREASE/DECREASE
INT/EXT	INTERNAL/EXTERNAL
IS	INCREASE SPEED
LCP	LOCAL CONTROL PANEL
LD	LOCKABLE DISCONNECT
LJB	LOCAL JUNCTION BOX
L/O	LOCAL/OFF
LOR	LOCAL/OFF/REMOTE
LOS	LOCK OFF STOP
L/R	LOCAL/REMOTE
LSR	LASER
MAG	MAGNETIC
O/A	OFF/AUTO
O/C	OPEN/CLOSE
O/M	OFF/MAINTENANCE
O/O	OFF/ON
OPN	OPEN
PROX	PROXIMITY
RAD	RADAR
RST	RESET
RTD	RESISTIVE TEMPERATURE DEVICE
SEL	SELECTOR
S/F	SLOW/FAST
SOF	SLOW/OFF/FAST
SOL	SOLENOID
S/S	START/STOP
S/W	SUMMER/WINTER
TC	THERMOCOUPLE
US	ULTRASONIC
VEL	VELOCITY
ΔT	THERMAL DISPERSION

APEGM Certificate of Authorization
SNC-Lavalin Inc.
No. 4489

NO.	REVISIONS	DATE	DESIGN	CHECK
00	ISSUED WITH IDENTIFICATION STANDARD	2013/05/28	CJR	CJR

SNC·LAVALIN
SNC-LAVALIN INC.
148 Nature Park Way
Winnipeg, MB, Canada R3P 0X7
204-786-8080

DESIGNED BY: C. REIMER
CHECKED BY: C. REIMER
DRAWN BY: S. FUNK
APPROVED BY: C. REIMER
SCALE: NTS
RELEASED FOR CONSTRUCTION BY:
DATE: 2013/01/09
DATE:
CONSULTANT NO.:

ENGINEER'S SEAL

PRELIMINARY
NOT TO BE USED FOR CONSTRUCTION

Winnipeg
THE CITY OF WINNIPEG
WATER AND WASTE DEPARTMENT

SOUTH END WATER POLLUTION CONTROL CENTRE

PROCESS AND INSTRUMENTATION DIAGRAM
LEGEND AND DETAILS

CITY DRAWING NUMBER	SHEET	REV.	SIZE
1-0102A-SK01	002	00	A1

1-0102A-SK01-002-00.dwg

LAST SAVE: 2013/06/03 – 1:54pm
PATH: M:\510276\4ENG\49PRC\DD – General DWG\1-0102A-SK01-002-00.dwg

A1 SIZE - 594mm x 841mm

PROCESS AREA IDENTIFIERS

IDENTIFIER	DEFINITION
A	GENERAL OR PROCESS AREA IS NOT APPLICABLE
B	SERVICE BUILDING, BOILERS, CHEMICAL STORAGE BUILDING
G	PUMP & SCREEN BUILDING, GRIT BUILDING, STANDBY GENERATOR BUILDING
M	ADMINISTRATION BUILDING & SEPTAGE FACILITY
P	PRIMARY CLARIFIERS
R	OXYGEN REACTORS
S	SECONDARY CLARIFIERS
U	UV DISINFECTION

EQUIPMENT IDENTIFICATION

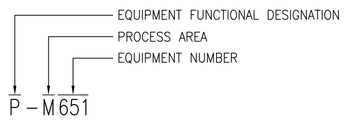

PROCESS LINE DESIGNATION

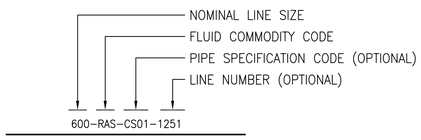

IMPERIAL PIPE SIZE CHART (METRIC EQUIVALENT)

IN		MM	IN		MM
1/8	=	3	14	=	350
1/4	=	6	16	=	400
3/8	=	10	18	=	450
1/2	=	12	20	=	500
3/4	=	20	22	=	550
1	=	25	24	=	600
1 1/4	=	32	26	=	650
1 1/2	=	38	28	=	700
2	=	50	30	=	750
2 1/2	=	65	32	=	800
3	=	75	34	=	850
3 1/2	=	90	36	=	900
4	=	100	38	=	950
4 1/2	=	112	40	=	1000
5	=	125	42	=	1050
6	=	150	44	=	1100
7	=	175	46	=	1150
8	=	200	48	=	1200
9	=	225	50	=	1250
10	=	250	52	=	1300
11	=	275	54	=	1350
12	=	300			

EQUIPMENT FUNCTIONAL DESIGNATIONS MECHANICAL AND PROCESS EQUIPMENT

IDENTIFIER	DEFINITION	NOTES
AD	AIR DRYER	
AF	AERATION FAN	
AG	AGITATOR	
AHU	AIR HANDLING UNIT	INCLUDES MAKE–UP AIR UNIT
B	BLOWER	
BD	BALANCE DAMPER	
BFP	BACK FLOW PREVENTOR	
BLR	BOILER	
BS	BAR SCREEN	
CAL	CALIBRATION COLUMN	
CC	COOLING COIL	
CDR	CONDENSOR	
CHLR	CHILLER	
CM	CLARIFIER MECHANISM	
CMP	COMPRESSOR	
CNV	CONVEYOR	INCLUDES SKIMMERS
CRN	CRANE	
CT	COOLING TOWER	
CU	CONDENSING UNIT	
CV	CHECK VALVE	
EF	EXHAUST FAN	
F	FAN – GENERAL	
FA	FLAME ARRESTOR	
FC	FAN COIL	
FD	FIRE DAMPER	UTILIZE SAME EQUIPMENT NUMBER AS AIR HANDLER
FDR	FEEDER	EXAMPLES SCREW FEEDER, CHLORINATOR, GLYCOL MAKE–UP UNIT
FEX	FIRE EXTINGUISHER	
FG	FLAP GATE	
FIL	FILTER	
GR	GRILLE – GENERAL	
GRD	GRILLE – DIFFUSER	
HTR	HEATER	GENERAL HEATERS, RADIANT HEATERS, ETC.
HC	HEATING COIL	
HCE	HEATING COIL, ELECTRIC	
HE	HEAT EXCHANGER	
HO	HOIST	
HOP	HOPPER	
HP	HEAT PUMP	
HRC	HEAT RECOVERY COIL	
HUM	HUMIDIFIER	
HV	HAND/MANUAL VALVE	
INJ	INJECTOR	
MXR	MIXER	
OD	OVERHEAD DOOR	
P	PUMP	
R	REACTOR (VARIOUS PROCESSES)	
S	SKID PACKAGE	
SA	SAMPLER	
SCBR	SCRUBBER	
SF	SUPPLY FAN	
SL	STOP LOGS	
SLG	SLUICE GATE	
STR	STRAINER	
TK	TANK	
TU	TERMINAL UNIT (HVAC)	INCLUDES CAV/VAV/DUAL DUCT BOXES
U	MISCELLANEOUS	E.G. WATER SOFTENER
UH	UNIT HEATER	
UVR	ULTRA–VIOLET (UV) REACTOR	
V	VESSEL, PRESSURE VESSEL	E.G. AIR RECEIVER, GLYCOL EXPANSION TANK
W	WEIR	
WGB	WASTE GATE BURNER	

FLUID COMMODITY CODES

IDENTIFIER	DEFINITION	IDENTIFIER	DEFINITION
ALP	AIR, LOW PRESSURE	IAS	HYDROGEN
CA	COMPRESSED AIR	LCP	LIQUID CONCENTRATED POLYMER
CDR	CONDENSER WATER RETURN	LDS	LAND DRAINAGE SEWER
CDS	CONDENSER WATER SUPPLY	LGO	LUBRICATING OIL
CE	CENTRATE	LOX	LIQUID OXYGEN
CG	CALIBRATION GAS	LPS	LOW PRESSURE STEAM
CHR	CHILLED WATER RETURN	MET	METHANOL
CHS	CHILLED WATER SUPPLY	ML	MIXED LIQUOR
CL2	CHLORINE	MP	MIXED POLYMER
CO2	CARBON DIOXIDE	N2	NITROGEN
CON	CONDENSATE	NG	NATURAL GAS
CS	COMBINED SEWER	O2	OXYGEN
CWR	COOLING WATER RETURN	PD	PROCESS DRAIN
CWS	COOLING WATER SUPPLY	PE	PRIMARY EFFLUENT
D	DRAIN	PO	PROCESS OVERFLOW
DCW	DOMESTIC COLD WATER	PS	PRIMARY SLUDGE
DG	DIGESTER GAS	PV	PROCESS VENT
DGH	DIGESTER GAS, HIGH PRESSURE	PW	POTABLE WATER
DHW	DOMESTIC HOT WATER	R	REFRIGERANT
DL	DECANT LIQUOR	RAS	RETURN ACTIVATED SLUDGE
DP	DRY POLYMER	RS	RAW SEWAGE
DS	DIGESTER SLUDGE	SC	SCUM
ES	ELECTRICAL SUPPLY	SE	SECONDARY EFFLUENT
FC	FERRIC CHLORIDE	SEA	SERVICE AIR
FE	FINAL EFFLUENT	SLC	SLUDGE CAKE
FOA	FOUL AIR	SUB	DAF SUBNATANT
FSL	FERMENTER SLUDGE	SW	SEAL WATER
FSU	FERMENTER SUPERNATANT	TBS	THICKENED BOTTOM SLUDGE
FSW	FLUSHING WATER	TCE	TREATED CENTRATE
GE	GRIT EFFLUENT	TO	THERMAL OXIDIZER
GR	GLYCOL RETURN	TS	THIN SLUDGE
GS	GLYCOL SUPPLY	TWAS	THICKENED WASTE ACTIVATED SLUDGE
HCO	HYDRAULIC OIL	VAC	VACUUM
HFW	HOT FLUSHING WATER	VTA	VENT TO ATMOSPHERE
HWR	HOT WATER RETURN	W	WATER
HWS	HOT WATER SUPPLY	WA	WASTE AIR
H2	HYDROGEN	WAS	WASTE ACTIVATED SLUDGE

APEGM Certificate of Authorization
SNC-Lavalin Inc.
No. 4489

NO.	REVISIONS	DATE	DESIGN	CHECK
00	ISSUED WITH IDENTIFICATION STANDARD	2013/05/28	CJR	CJR

SNC·LAVALIN
SNC–LAVALIN INC.
148 Nature Park Way
Winnipeg, MB, Canada R3P 0X7
204–786–8080

DESIGNED BY: C. REIMER	CHECKED BY: C. REIMER
DRAWN BY: S. FUNK	APPROVED BY: C. REIMER
SCALE: NTS	RELEASED FOR CONSTRUCTION BY:
DATE: 2013/01/09	DATE:
CONSULTANT NO.:	

ENGINEER'S SEAL

PRELIMINARY
NOT TO BE USED FOR CONSTRUCTION

Winnipeg
THE CITY OF WINNIPEG
WATER AND WASTE DEPARTMENT

SOUTH END WATER POLLUTION CONTROL CENTRE

PROCESS AND INSTRUMENTATION DIAGRAM
LEGEND AND DETAILS

CITY DRAWING NUMBER	SHEET	REV.	SIZE
1–0102A–SK01	003	00	A1

1–0102A–SK01–003–00.dwg

LAST SAVE: 2013/06/03 – 1:55pm
PATH: M:\510276\4ENG\49PRC\DD – General DWG\1–0102A–SK01–003–00.dwg

A1 SIZE - 594mm x 841mm

TK-S210 SECONDARY CLARIFIER 1	
DIAMETER:	33.5 m
SIDE WALL DEPTH:	4.6 m
VOLUME:	4048 m^3
SURFACE AREA:	880 m^2
WEIR LENGTH:	105 m
FLOW DISTRIBUTION:	25%
DETENTION TIME (AVG):	6.70 HR
DETENTION TIME (PEAK):	3.89 HR
SURFACE OVERFLOW RATE (AVG):	3.66 $m^3/m^2/d$
SURFACE OVERFLOW RATE (PEAK):	6.18 $m^3/m^2/d$
WEIR LOADING (AVG):	201
WEIR LOADING (PEAK):	347

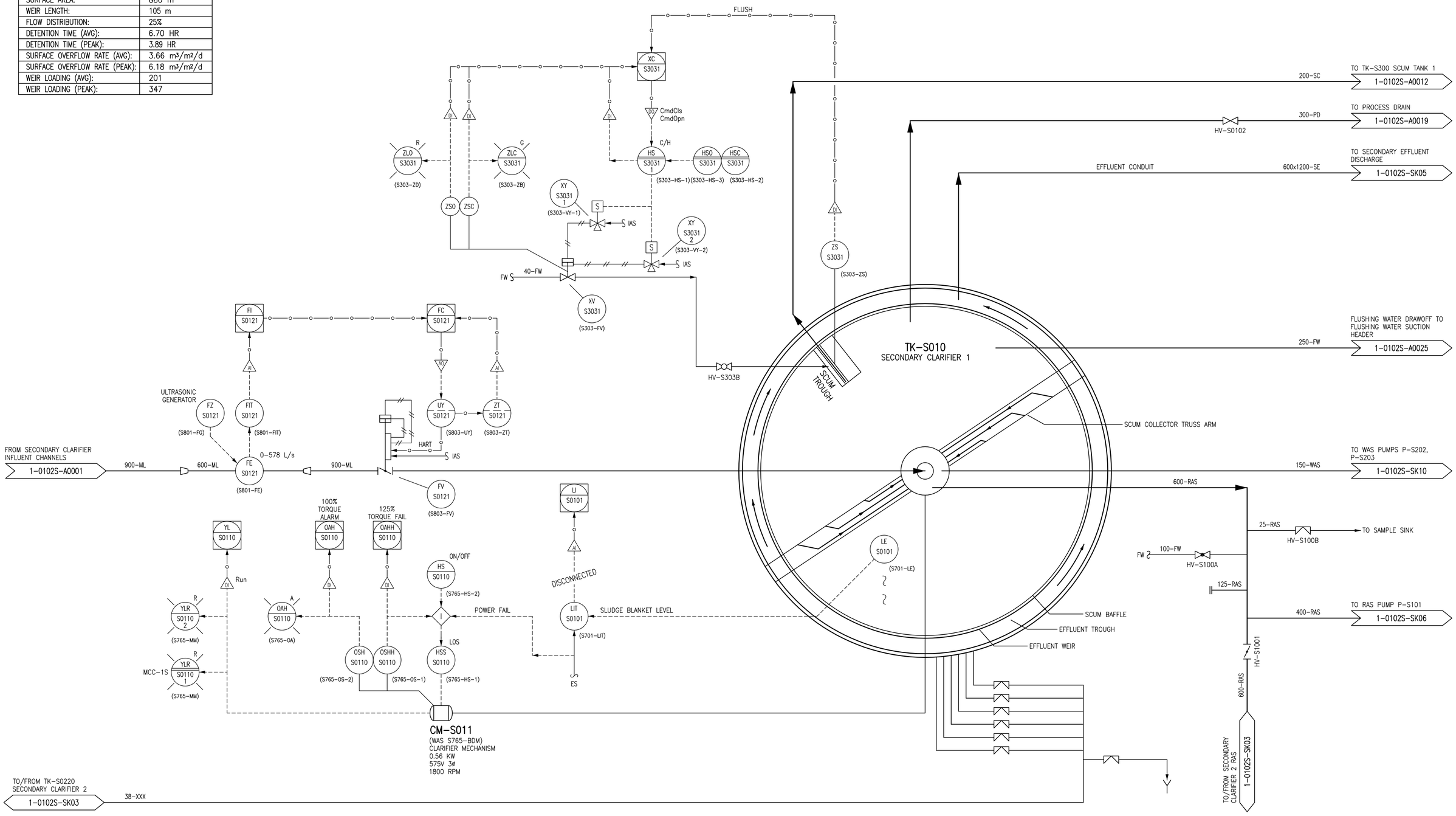

DRAWING NUMBER	REFERENCE DRAWINGS
1-0102A-SK01	PROCESS & INSTRUMENTATION DIAGRAM LEGEND & DETAILS

NOTES:

1. THIS DRAWING SUPERSEDES PORTIONS OF DRAWINGS SEP-501 AND SEP-505.
2. ALL INSTRUMENTS SHOWN IN AN AUXILIARY LOCATION ARE IN THE ASSOCIATED PANEL LABELED "SCUM TROUGH FLUSHING CONTROL S3031" LOCATED ON THE MAIN FLOOR WALKWAY BETWEEN THE CLARIFIERS.
3. REFERENCE THE ACTUAL P&ID DRAWINGS FOR THE SEWPCC FACILITY. THIS DRAWING WAS CREATED UNDER THE IDENTIFICATION STANDARD PROJECT AS A SAMPLE DRAWING.

APEGM Certificate of Authorization
SNC-Lavalin Inc.
No. 4489

NO.	REVISIONS	DATE	DESIGN	CHECK
00	ISSUED WITH IDENTIFICATION STANDARD	2013/05/28	VE	CJR

SNC·LAVALIN
SNC-LAVALIN INC.
148 Nature Park Way
Winnipeg, MB, Canada R3P 0X7
204-786-8080

DESIGNED BY: EXISTING	CHECKED BY: C. REIMER
DRAWN BY: S. FUNK	APPROVED BY: C. REIMER
SCALE: NTS	RELEASED FOR CONSTRUCTION BY:
DATE: 2012/12/13	DATE:
CONSULTANT NO.:	

ENGINEER'S SEAL

PRELIMINARY
NOT TO BE USED FOR CONSTRUCTION

Winnipeg
THE CITY OF WINNIPEG
WATER AND WASTE DEPARTMENT

SOUTH END WATER POLLUTION CONTROL CENTRE
SECONDARY CLARIFIERS
PROCESS & INSTRUMENTATION DIAGRAM
CLARIFIER 1
PROPOSED IDENTIFICATION

CITY DRAWING NUMBER	SHEET	REV.	SIZE
1-0102S-SK02	001	00	A1

1-0102S-SK02-001-00.dwg

LAST SAVE: 2013/06/03 - 1:55pm
PATH: M:\510276\ENG\49PROC\DD - General DWG\1-0102S-SK02-001-00.dwg

A1 SIZE - 594mm x 841mm

TK-S220 SECONDARY CLARIFIER 2	
DIAMETER:	33.5 m
SIDE WALL DEPTH:	4.6 m
VOLUME:	4048 m^3
SURFACE AREA:	880 m^2
WEIR LENGTH:	105 m
FLOW DISTRIBUTION:	25%
DETENTION TIME (AVG):	6.70 HR
DETENTION TIME (PEAK):	3.89 HR
SURFACE OVERFLOW RATE (AVG):	3.66 $m^3/m^2/d$
SURFACE OVERFLOW RATE (PEAK):	6.18 $m^3/m^2/d$
WEIR LOADING (AVG):	201
WEIR LOADING (PEAK):	347

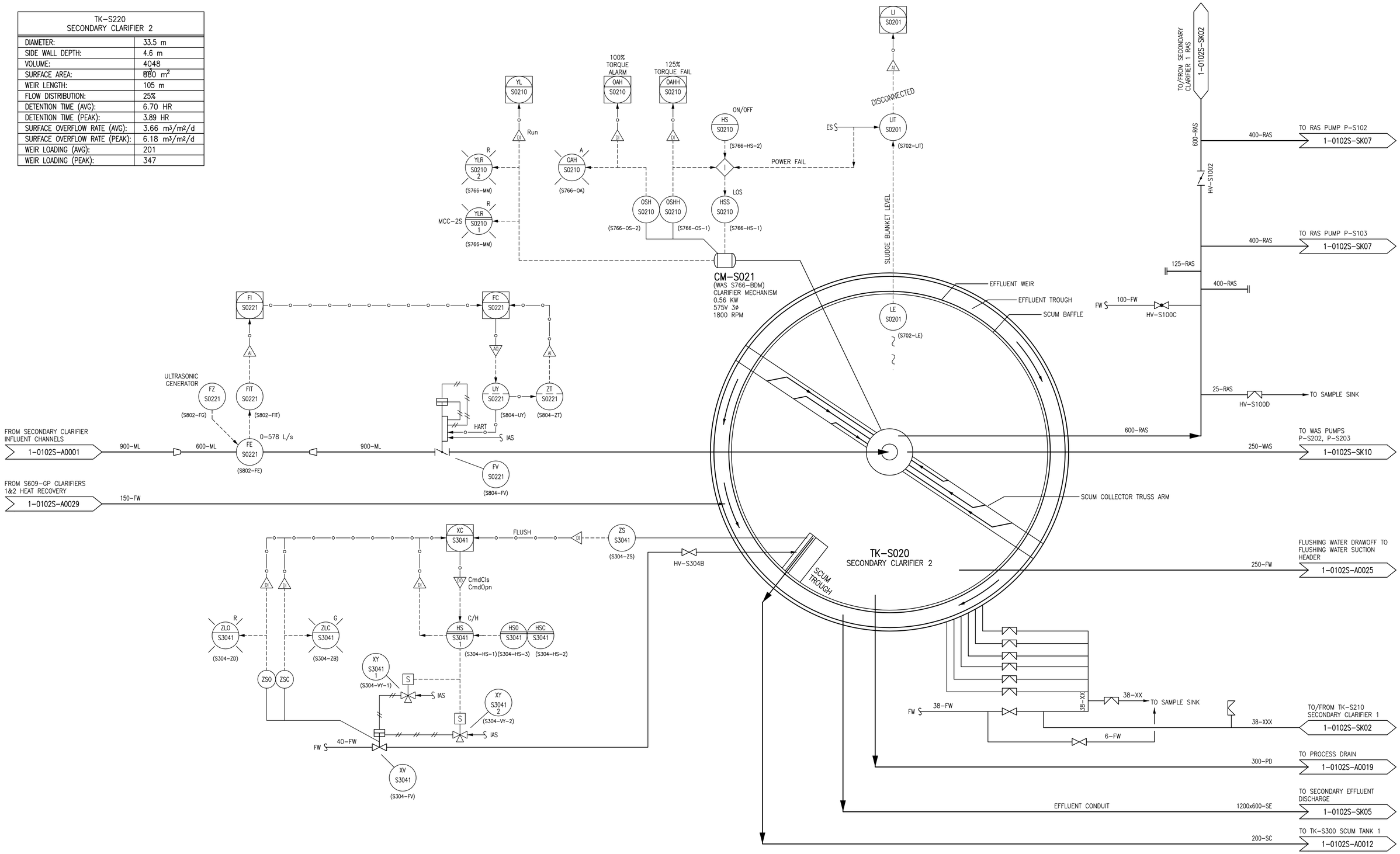

NOTES:

1. THIS DRAWING SUPERSEDES PORTIONS OF DRAWINGS SEP-501 AND SEP-505.
2. ALL INSTRUMENTS SHOWN IN AN AUXILIARY LOCATION ARE IN THE ASSOCIATED PANEL LABELED "SCUM TROUGH FLUSHING CONTROL S3041" LOCATED ON THE MAIN FLOOR WALKWAY BETWEEN THE CLARIFIERS.
3. REFERENCE THE ACTUAL P&ID DRAWINGS FOR THE SEWPCC FACILITY. THIS DRAWING WAS CREATED UNDER THE IDENTIFICATION STANDARD PROJECT AS A SAMPLE DRAWING.

DRAWING NUMBER	REFERENCE DRAWINGS
1-0102A-SK01	PROCESS & INSTRUMENTATION DIAGRAM LEGEND & DETAILS

APEGM Certificate of Authorization
SNC-Lavalin Inc.
No. 4489

NO.	REVISIONS	DATE	DESIGN	CHECK
00	ISSUED WITH IDENTIFICATION STANDARD	2013/05/28	VE	CJR

SNC·LAVALIN
SNC-LAVALIN INC.
148 Nature Park Way
Winnipeg, MB, Canada R3P 0X7
204-786-8080

DESIGNED BY: EXISTING	CHECKED BY: C. REIMER
DRAWN BY: S. FUNK	APPROVED BY: C. REIMER
SCALE: NTS	RELEASED FOR CONSTRUCTION BY:
DATE: 2012/12/14	DATE:
CONSULTANT NO.:	

ENGINEER'S SEAL

PRELIMINARY
NOT TO BE USED FOR CONSTRUCTION

Winnipeg
THE CITY OF WINNIPEG
WATER AND WASTE DEPARTMENT

SOUTH END WATER POLLUTION CONTROL CENTRE
SECONDARY CLARIFIERS
PROCESS & INSTRUMENTATION DIAGRAM
CLARIFIER 2
PROPOSED IDENTIFICATION

CITY DRAWING NUMBER	SHEET	REV.	SIZE
1-0102S-SK03	001	00	A1

LAST SAVE: 2013/06/03 - 1:55pm
PATH: M:\510276\4ENG\49PRC\DD - General DWG\1-0102S-SK03-001-00.dwg

1-0102S-SK03-001-00.dwg

A1 SIZE - 594mm x 841mm

TK-S230 SECONDARY CLARIFIER 3	
DIAMETER:	45.7 m
SIDE WALL DEPTH:	4.6 m
VOLUME:	7544 m^3
SURFACE AREA:	1640 m^2
WEIR LENGTH:	144 m
FLOW DISTRIBUTION:	50%
DETENTION TIME (AVG):	6.24 HR
DETENTION TIME (PEAK):	3.62 HR
SURFACE OVERFLOW RATE (AVG):	3.84 m3/m2/d
SURFACE OVERFLOW RATE (PEAK):	6.63 m3/m2/d
WEIR LOADING (AVG):	201
WEIR LOADING (PEAK):	347

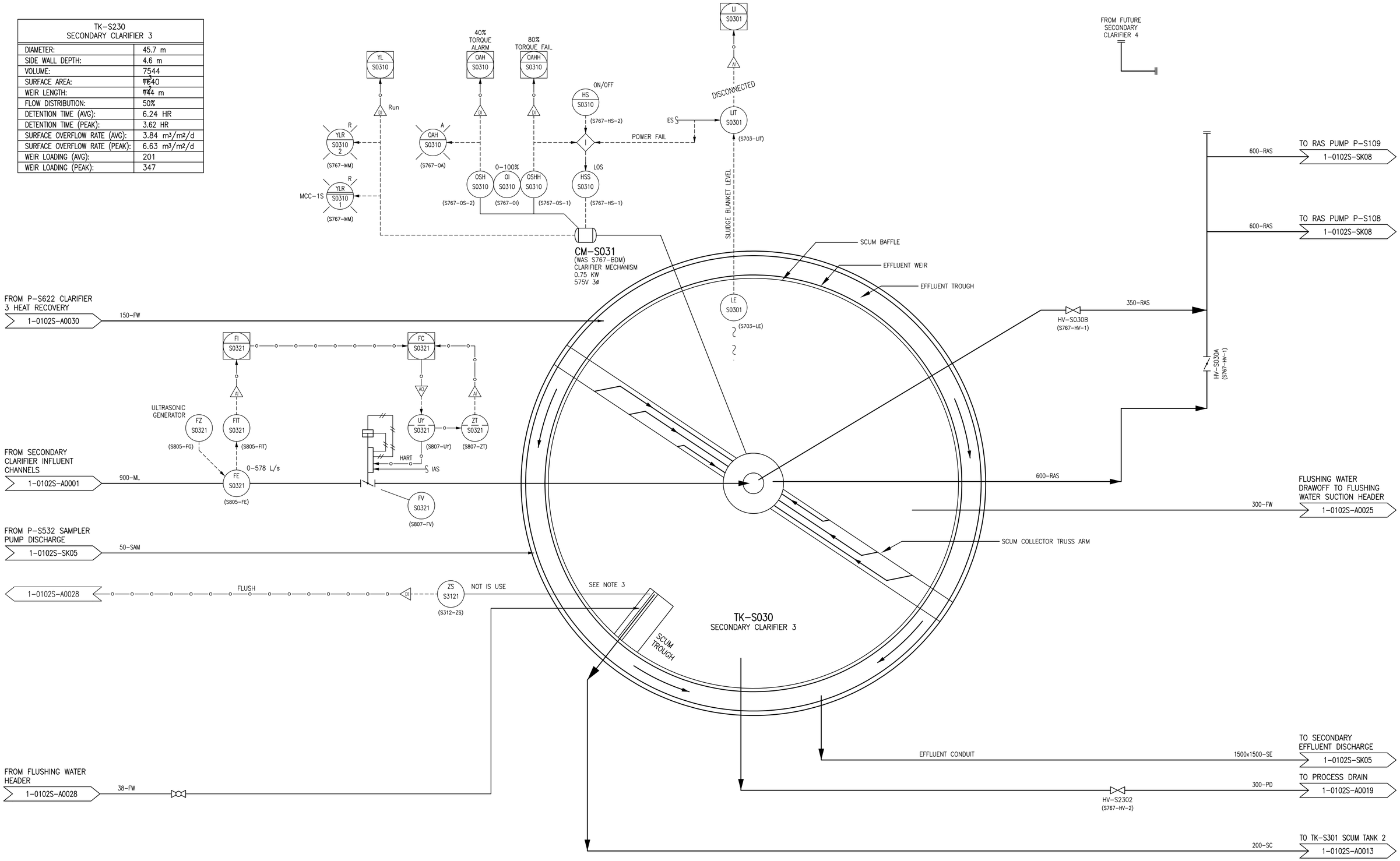

NOTES:

1. THIS DRAWING SUPERSEDES PORTIONS OF DRAWINGS SEP-502 AND SEP-506.
2. ALL INSTRUMENTS SHOWN IN AN AUXILIARY LOCATION ARE IN THE ASSOCIATED SCUM TROUGH FLUSHING CONTROL PANEL LOCATED ON THE MAIN FLOOR NEAR THE CLARIFIER.
3. THE SCUM TROUGH FLUSH POSITION SWITCH AND FLUSHING WATER PIPE DO NOT APPEAR TO BE CURRENTLY IN USE AS THEY ARE NOT POSITIONED SUCH THAT THEY WOULD BE ACTIVATED BY THE SCUM COLLECTOR ARM.
4. REFERENCE THE ACTUAL P&ID DRAWINGS FOR THE SEWPCC FACILITY. THIS DRAWING WAS CREATED UNDER THE IDENTIFICATION STANDARD PROJECT AS A SAMPLE DRAWING.

DRAWING NUMBER	REFERENCE DRAWINGS
1-0102A-SK01	PROCESS & INSTRUMENTATION DIAGRAM LEGEND & DETAILS

APEGM Certificate of Authorization
SNC-Lavalin Inc.
No. 4489

NO.	REVISIONS	DATE	DESIGN	CHECK
00	ISSUED WITH IDENTIFICATION STANDARD	2013/05/28	VE	CJR

SNC·LAVALIN
SNC-LAVALIN INC.
148 Nature Park Way
Winnipeg, MB, Canada R3P 0X7
204-786-8080

DESIGNED BY: EXISTING	CHECKED BY: C. REIMER
DRAWN BY: S. FUNK	APPROVED BY: C. REIMER
SCALE: NTS	RELEASED FOR CONSTRUCTION BY:
DATE: 2012/12/14	DATE:
CONSULTANT NO.:	

ENGINEER'S SEAL

PRELIMINARY
NOT TO BE USED FOR CONSTRUCTION

Winnipeg
THE CITY OF WINNIPEG
WATER AND WASTE DEPARTMENT

SOUTH END WATER POLLUTION CONTROL CENTRE
SECONDARY CLARIFIERS
PROCESS & INSTRUMENTATION DIAGRAM
CLARIFIER 3
PROPOSED IDENTIFICATION

CITY DRAWING NUMBER	SHEET	REV.	SIZE
1-0102S-SK04	001	00	A1

1-0102S-SK04-001-00.dwg

LAST SAVE: 2013/06/03 - 1:56pm
PATH: M:\51027\6\ENG\49PRC\DD - General DWG\1-0102S-SK04-001-00.dwg

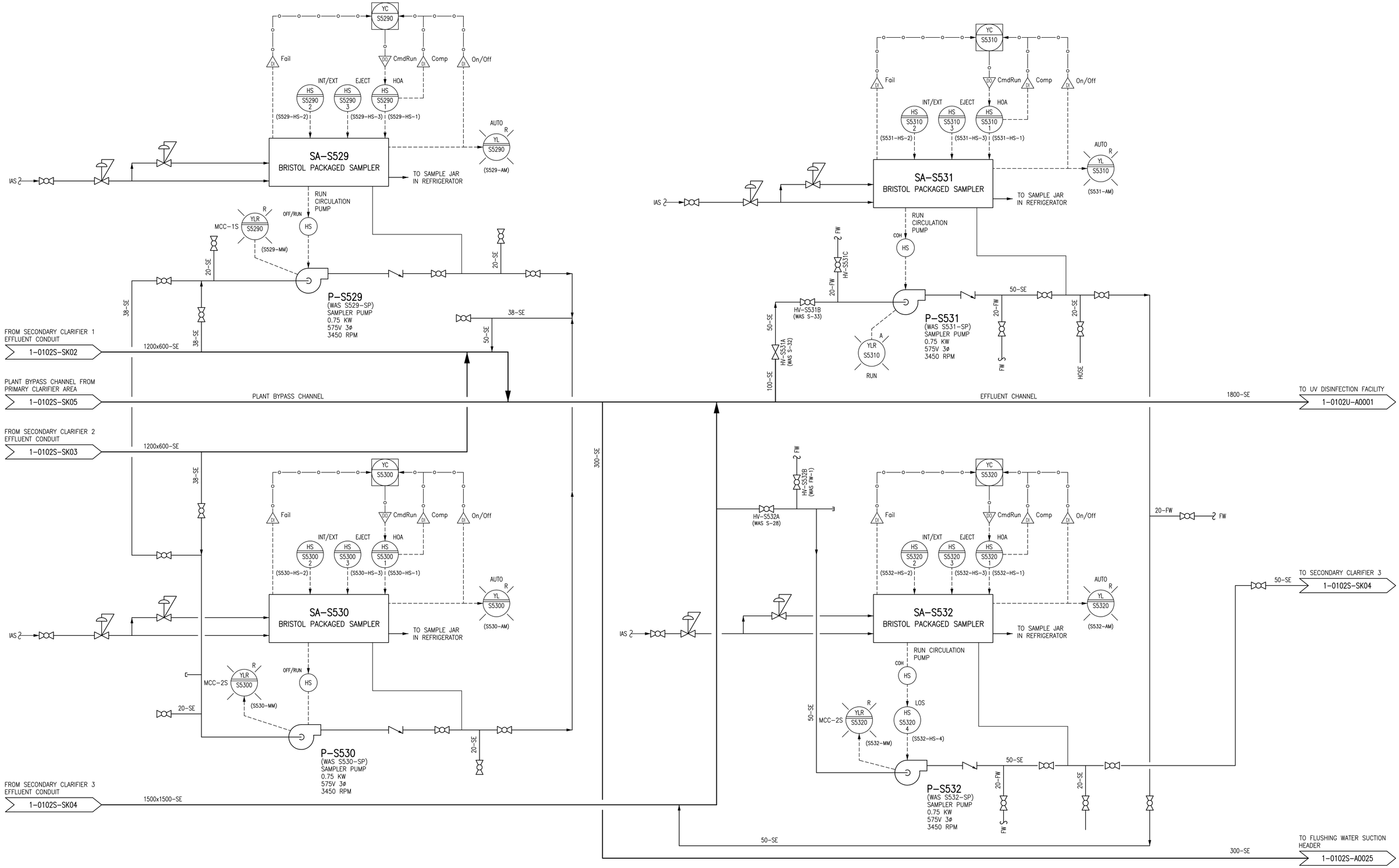

NOTES:

1. THIS DRAWING SUPERSEDES PORTIONS OF DRAWING SEP-510.
2. REFERENCE THE ACTUAL P&ID DRAWINGS FOR THE SEWPCC FACILITY. THIS DRAWING WAS CREATED UNDER THE IDENTIFICATION STANDARD PROJECT AS A SAMPLE DRAWING.

APEGM Certificate of Authorization
SNC-Lavalin Inc.
No. 4489

NO.	REVISIONS	DATE	DESIGN	CHECK
00	ISSUED WITH IDENTIFICATION STANDARD	2013/05/28	VE	CJR

SNC·LAVALIN
SNC-LAVALIN INC.
148 Nature Park Way
Winnipeg, MB, Canada R3P 0X7
204-786-8080

DESIGNED BY: EXISTING	CHECKED BY: C. REIMER
DRAWN BY: S. FUNK	APPROVED BY: C. REIMER
SCALE: NTS	RELEASED FOR CONSTRUCTION BY:
DATE: 2012/12/14	DATE:
CONSULTANT NO.:	

ENGINEER'S SEAL

PRELIMINARY
NOT TO BE USED FOR CONSTRUCTION

Winnipeg
THE CITY OF WINNIPEG
WATER AND WASTE DEPARTMENT

SOUTH END WATER POLLUTION CONTROL CENTRE
SECONDARY CLARIFIERS
PROCESS & INSTRUMENTATION DIAGRAM
SECONDARY CLARIFIER EFFLUENT & SAMPLE SYSTEM
PROPOSED IDENTIFICATION

CITY DRAWING NUMBER	SHEET	REV.	SIZE
1-0102S-SK05	001	00	A1

DRAWING NUMBER	REFERENCE DRAWINGS
1-0102A-SK01	PROCESS & INSTRUMENTATION DIAGRAM LEGEND & DETAILS

A1 SIZE - 594mm x 841mm

LAST SAVE: 2013/06/03 - 1:56pm
PATH: M:\510276\4ENG\49PRC\DD - General DWG\1-0102S-SK05-001-00.dwg

1-0102S-SK05-001-00.dwg

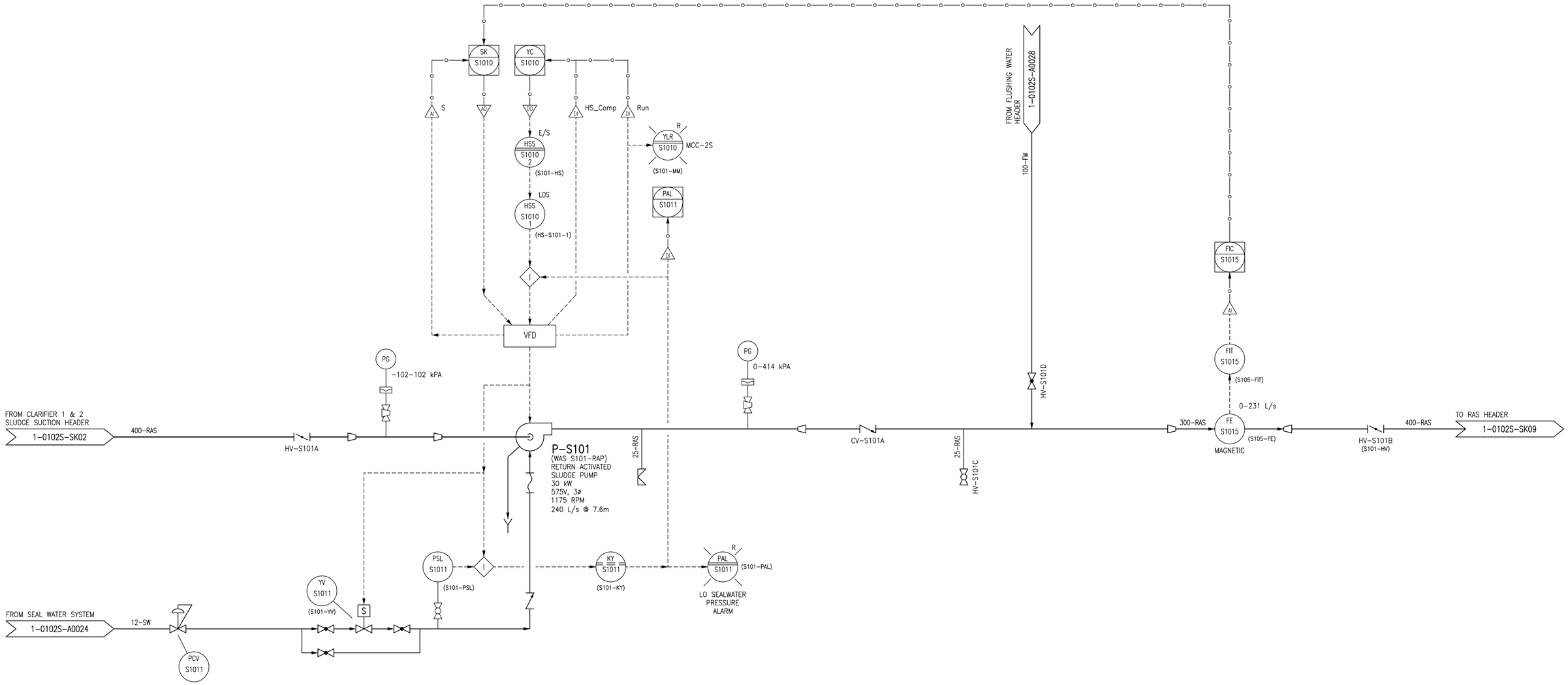

NOTES:

1. THIS DRAWING SUPERSEDES PORTIONS OF DRAWING SEP-501.
2. ALL INSTRUMENTS SHOWN IN AN AUXILIARY LOCATION ARE IN THE ELECTRICAL ROOM NEAR THE VFD FOR THE ASSOCIATED PUMP.
3. REFERENCE THE ACTUAL P&ID DRAWINGS FOR THE SEWPCC FACILITY. THIS DRAWING WAS CREATED UNDER THE IDENTIFICATION STANDARD PROJECT AS A SAMPLE DRAWING.

APEGM Certificate of Authorization
SNC-Lavalin Inc.
No. 4489

DRAWING NUMBER	REFERENCE DRAWINGS
1-0102A-SK01	PROCESS & INSTRUMENTATION DIAGRAM LEGEND & DETAILS

NO.	REVISIONS	DATE	DESIGN	CHECK
00	ISSUED WITH IDENTIFICATION STANDARD	2013/05/28	VE	CJR

SNC·LAVALIN

SNC-LAVALIN INC.
148 Nature Park Way
Winnipeg, MB, Canada R3P 0X7
204-786-8080

DESIGNED BY: EXISTING	CHECKED BY: C. REIMER
DRAWN BY: S. FUNK	APPROVED BY: C. REIMER
SCALE: NTS	RELEASED FOR CONSTRUCTION BY:
DATE: 2012/12/14	DATE:
CONSULTANT NO.:	

ENGINEER'S SEAL

PRELIMINARY
NOT TO BE USED FOR CONSTRUCTION

Winnipeg
THE CITY OF WINNIPEG
WATER AND WASTE DEPARTMENT

SOUTH END WATER POLLUTION CONTROL CENTRE
SECONDARY CLARIFIERS
PROCESS & INSTRUMENTATION DIAGRAM
RETURN ACTIVATED SLUDGE PUMP P-S101
PROPOSED IDENTIFICATION

CITY DRAWING NUMBER	SHEET	REV.	SIZE
1-0102S-SK06	001	00	A1

1-0102S-SK06-001-00.dwg

A1 SIZE - 594mm x 841mm

LAST SAVE: 2013/06/03 - 1:56pm
PATH: M:\510276\4ENG\49PRC\DD - General DWG\1-0102S-SK06-001-00.dwg

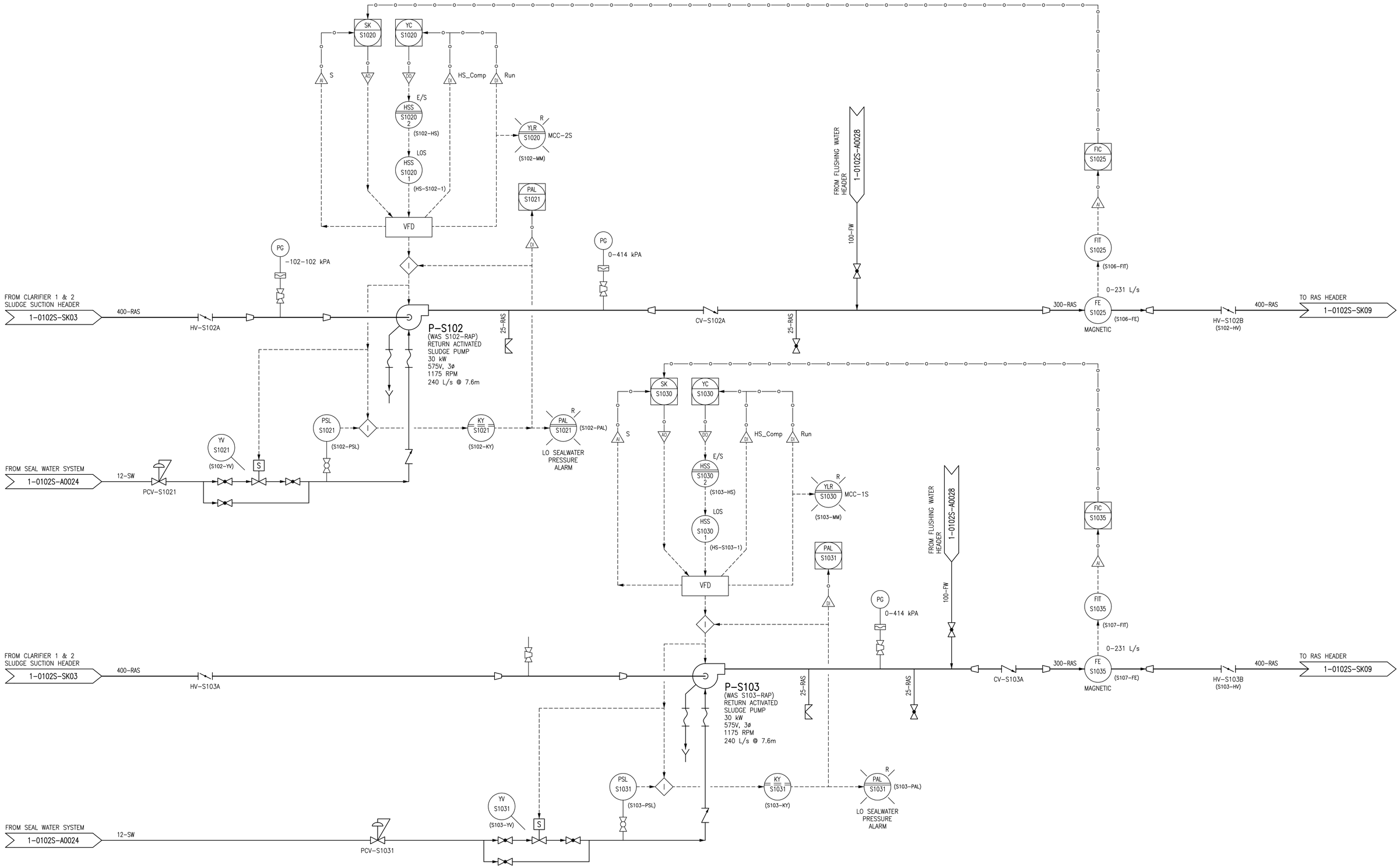

NOTES:

1. THIS DRAWING SUPERSEDES PORTIONS OF DRAWING SEP-501.
2. ALL INSTRUMENTS SHOWN IN AN AUXILIARY LOCATION ARE IN THE ELECTRICAL ROOM NEAR THE VFD FOR THE ASSOCIATED PUMP.
3. REFERENCE THE ACTUAL P&ID DRAWINGS FOR THE SEWPCC FACILITY. THIS DRAWING WAS CREATED UNDER THE IDENTIFICATION STANDARD PROJECT AS A SAMPLE DRAWING.

APEGM Certificate of Authorization
SNC-Lavalin Inc.
No. 4489

DRAWING NUMBER	REFERENCE DRAWINGS
1-0102A-SK01	PROCESS & INSTRUMENTATION DIAGRAM LEGEND & DETAILS

NO.	REVISIONS	DATE	DESIGN	CHECK
00	ISSUED WITH IDENTIFICATION STANDARD	2013/05/28	VE	CJR

SNC·LAVALIN

SNC-LAVALIN INC.
148 Nature Park Way
Winnipeg, MB, Canada R3P 0X7
204-786-8080

DESIGNED BY: EXISTING	CHECKED BY: C. REIMER
DRAWN BY: S. FUNK	APPROVED BY: C. REIMER
SCALE: NTS	RELEASED FOR CONSTRUCTION BY:
DATE: 2012/12/14	DATE:
CONSULTANT NO.:	

ENGINEER'S SEAL

PRELIMINARY
NOT TO BE USED FOR CONSTRUCTION

Winnipeg
THE CITY OF WINNIPEG
WATER AND WASTE DEPARTMENT

SOUTH END WATER POLLUTION CONTROL CENTRE
SECONDARY CLARIFIERS
PROCESS & INSTRUMENTATION DIAGRAM
RETURN ACTIVATED SLUDGE PUMPS P-S102 & P-S103
PROPOSED IDENTIFICATION

CITY DRAWING NUMBER	SHEET	REV.	SIZE
1-0102S-SK07	001	00	A1

1-0102S-SK07-001-00.dwg

A1 SIZE - 594mm x 841mm

LAST SAVE: 2013/06/03 - 1:57pm
PATH: M:\510276\4ENG\49PROD\ - General DWG\1-0102S-SK07-001-00.dwg

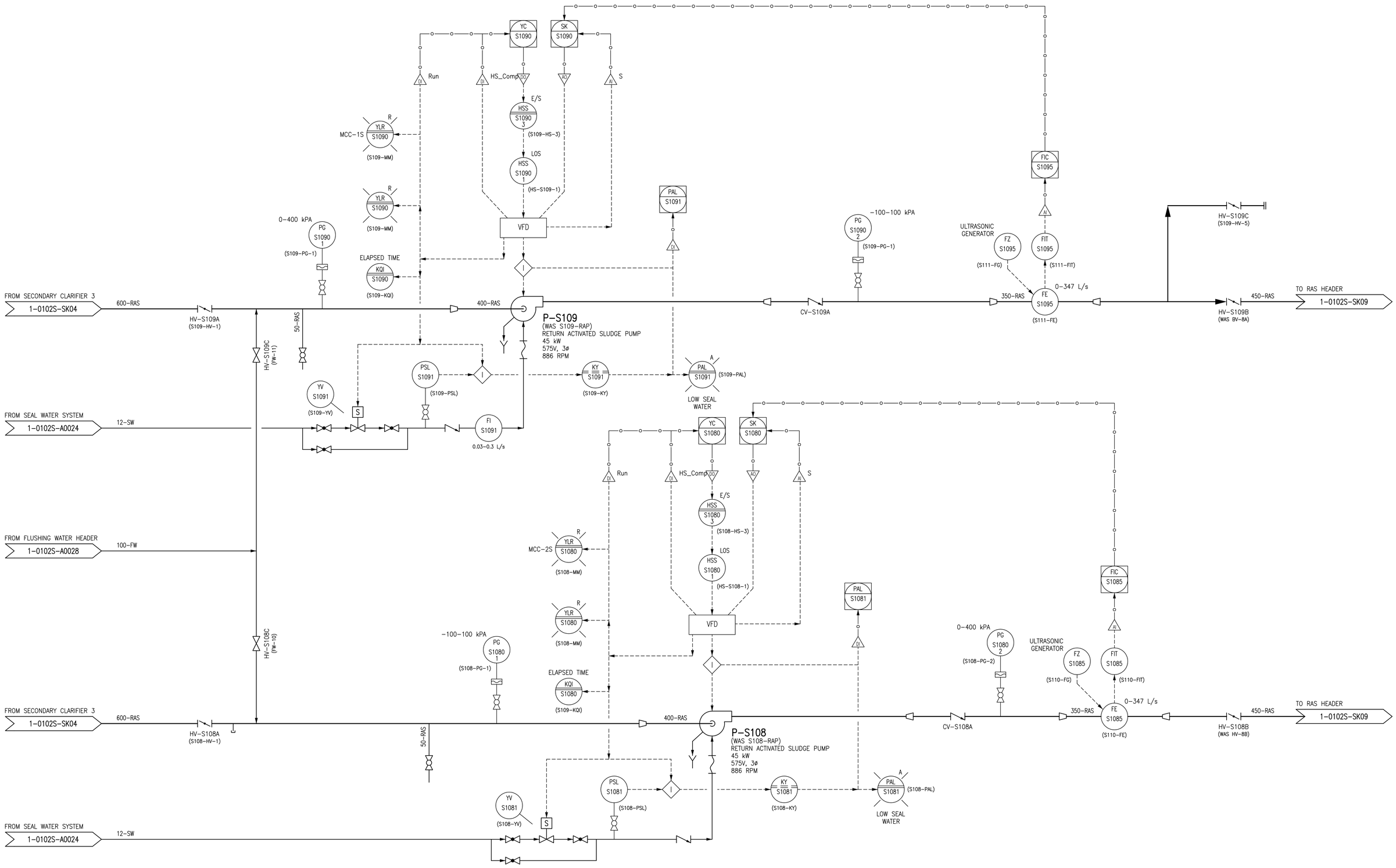

NOTES:

1. THIS DRAWING SUPERSEDES PORTIONS OF DRAWING SEP-502.
2. ALL INSTRUMENTS SHOWN IN AN AUXILIARY LOCATION ARE IN THE VFD PANEL FOR THE ASSOCIATED PUMP, UNLESS OTHERWISE SPECIFIED.
3. REFERENCE THE ACTUAL P&ID DRAWINGS FOR THE SEWPCC FACILITY. THIS DRAWING WAS CREATED UNDER THE IDENTIFICATION STANDARD PROJECT AS A SAMPLE DRAWING.

APEGM Certificate of Authorization
SNC-Lavalin Inc.
No. 4489

DRAWING NUMBER	REFERENCE DRAWINGS
1-0102A-SK01	PROCESS & INSTRUMENTATION DIAGRAM LEGEND & DETAILS

NO.	REVISIONS	DATE	DESIGN	CHECK
00	ISSUED WITH IDENTIFICATION STANDARD	2013/05/28	VE	CJR

SNC·LAVALIN
SNC-LAVALIN INC.
148 Nature Park Way
Winnipeg, MB, Canada R3P 0X7
204-786-8080

DESIGNED BY: EXISTING	CHECKED BY: C. REIMER
DRAWN BY: S. FUNK	APPROVED BY: C. REIMER
SCALE: NTS	RELEASED FOR CONSTRUCTION BY:
DATE: 2012/12/14	DATE:
CONSULTANT NO.:	

ENGINEER'S SEAL

PRELIMINARY
NOT TO BE USED FOR CONSTRUCTION

Winnipeg
THE CITY OF WINNIPEG
WATER AND WASTE DEPARTMENT

SOUTH END WATER POLLUTION CONTROL CENTRE
SECONDARY CLARIFIERS
PROCESS & INSTRUMENTATION DIAGRAM
RETURN ACTIVATED SLUDGE PUMPS P-S108 & P-S109
PROPOSED IDENTIFICATION

CITY DRAWING NUMBER	SHEET	REV.	SIZE
1-0102S-SK08	001	00	A1

1-0102S-SK08-001-00.dwg

A1 SIZE - 594mm x 841mm

LAST SAVE: 2013/06/03 - 1:57pm
PATH: M:\51027\6\ENG\49PRC\DD - General DWG\1-0102S-SK08-001-00.dwg

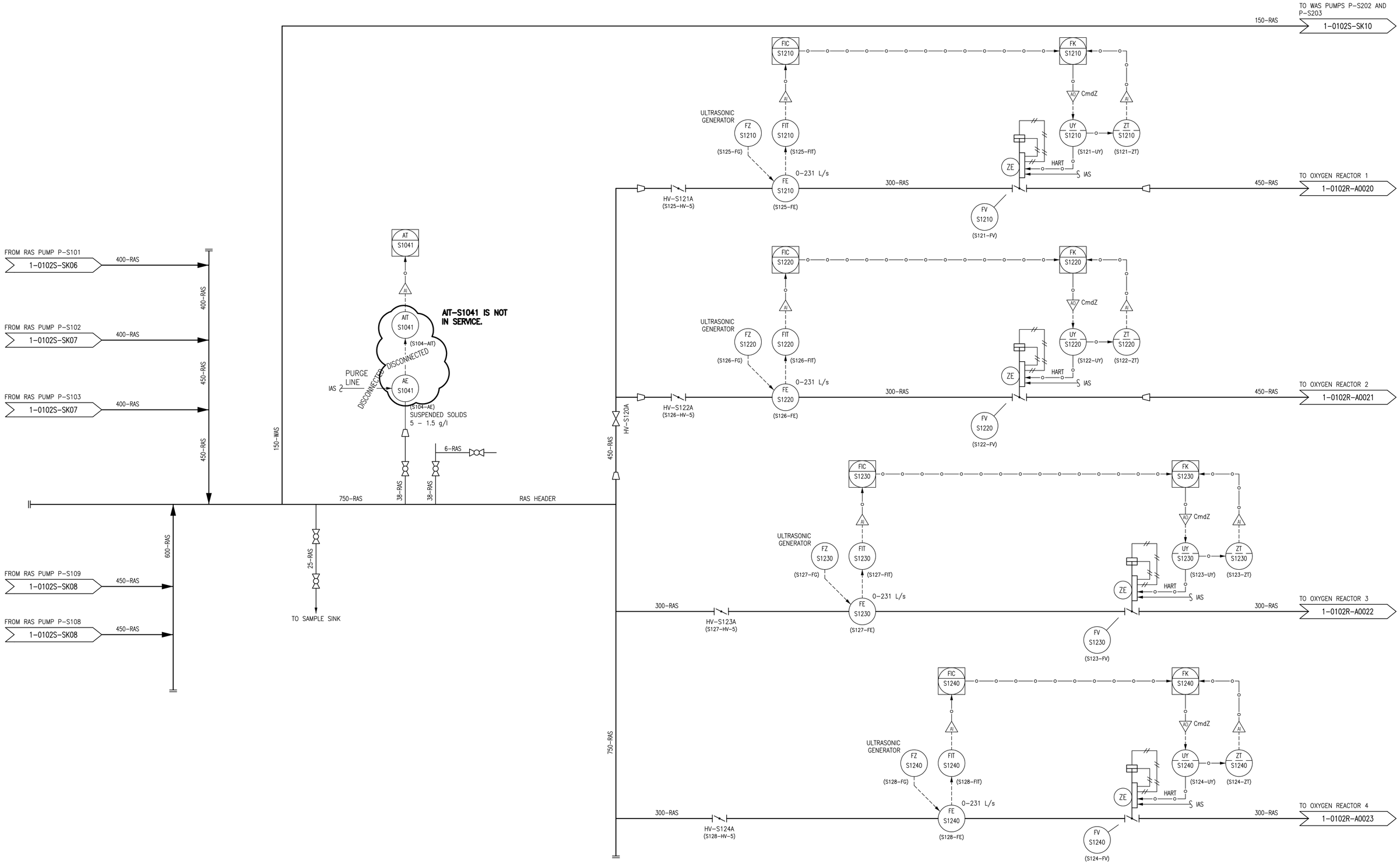

NOTES:

1. THIS DRAWING SUPERSEDES PORTIONS OF DRAWINGS SEP-501, SEP-502, AND SEP-503.
2. REFERENCE THE ACTUAL P&ID DRAWINGS FOR THE SEWPCC FACILITY. THIS DRAWING WAS CREATED UNDER THE IDENTIFICATION STANDARD PROJECT AS A SAMPLE DRAWING.

DRAWING NUMBER	REFERENCE DRAWINGS
1-0102A-SK01	PROCESS & INSTRUMENTATION DIAGRAM LEGEND & DETAILS

APEGM Certificate of Authorization
SNC-Lavalin Inc.
No. 4489

NO.	REVISIONS	DATE	DESIGN	CHECK
00	ISSUED WITH IDENTIFICATION STANDARD	2013/05/28	VE	CJR

SNC·LAVALIN
SNC-LAVALIN INC.
148 Nature Park Way
Winnipeg, MB, Canada R3P 0X7
204-786-8080

DESIGNED BY: EXISTING	CHECKED BY: C. REIMER
DRAWN BY: S. FUNK	APPROVED BY: C. REIMER
SCALE: NTS	RELEASED FOR CONSTRUCTION BY:
DATE: 2012/12/14	DATE:
CONSULTANT NO.:	

ENGINEER'S SEAL

PRELIMINARY
NOT TO BE USED FOR CONSTRUCTION

Winnipeg
THE CITY OF WINNIPEG
WATER AND WASTE DEPARTMENT

SOUTH END WATER POLLUTION CONTROL CENTRE
SECONDARY CLARIFIERS
PROCESS & INSTRUMENTATION DIAGRAM
RAS HEADER
PROPOSED IDENTIFICATION

CITY DRAWING NUMBER	SHEET	REV.	SIZE
1-0102S-SK09	001	00	A1

1-0102S-SK09-001-00.dwg

A1 SIZE - 594mm x 841mm

LAST SAVE: 2013/06/03 - 1:57pm
PATH: M:\51027\4ENG\49PRC\DD - General DWG\1-0102S-SK09-001-00.dwg

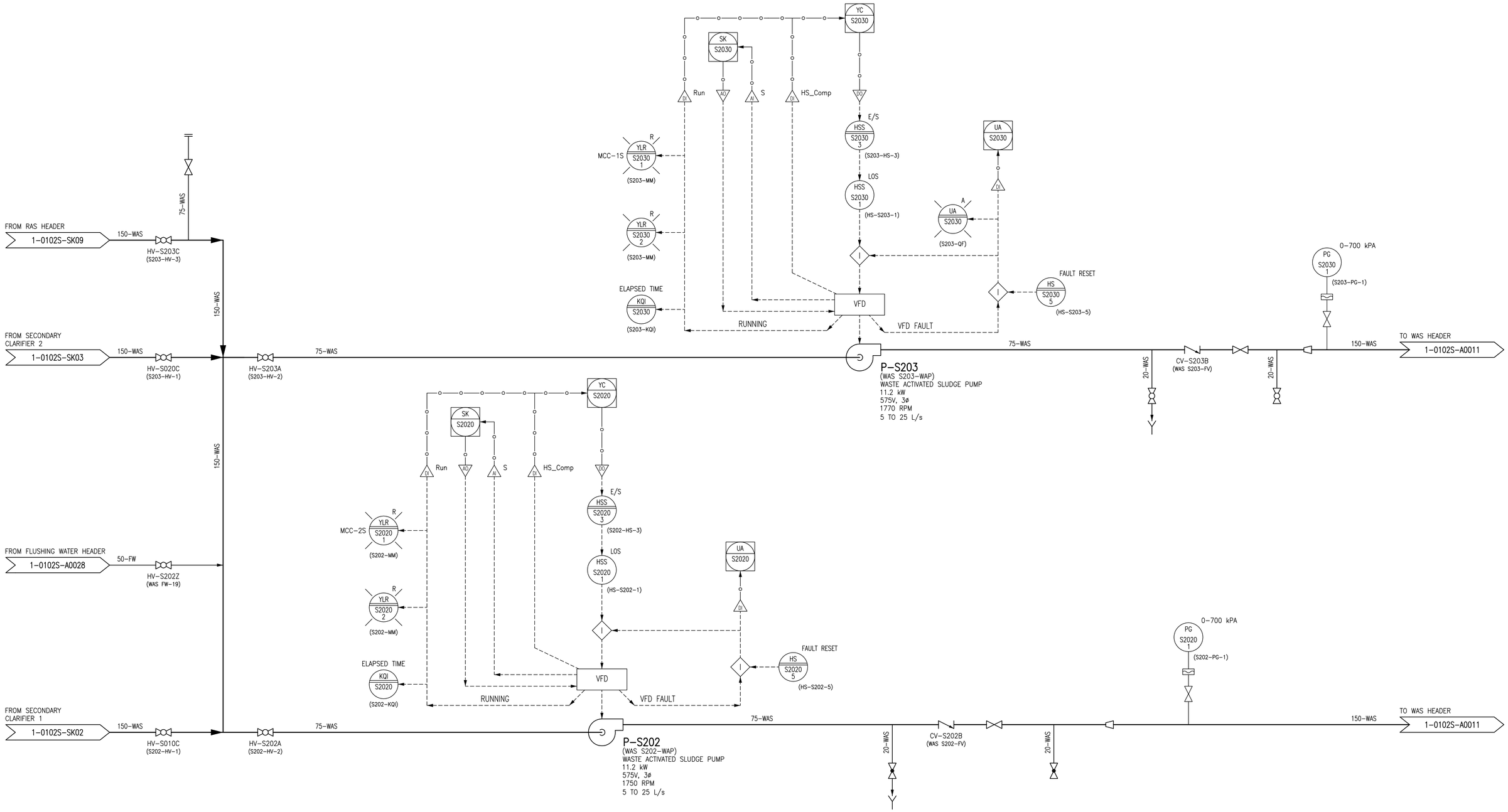

NOTES:

1. THIS DRAWING SUPERSEDES PORTIONS OF DRAWING SEP-504.
2. ALL INSTRUMENTS SHOWN IN AN AUXILIARY LOCATION ARE IN THE VFD FOR THE ASSOCIATED PUMP.
3. REFERENCE THE ACTUAL P&ID DRAWINGS FOR THE SEWPCC FACILITY. THIS DRAWING WAS CREATED UNDER THE IDENTIFICATION STANDARD PROJECT AS A SAMPLE DRAWING.

DRAWING NUMBER	REFERENCE DRAWINGS
1-0102A-SK01	PROCESS & INSTRUMENTATION DIAGRAM LEGEND & DETAILS

APEGM Certificate of Authorization
SNC-Lavalin Inc.
No. 4489

NO.	REVISIONS	DATE	DESIGN	CHECK
00	ISSUED WITH IDENTIFICATION STANDARD	2013/05/28	VE	CJR

SNC·LAVALIN

SNC-LAVALIN INC.
148 Nature Park Way
Winnipeg, MB, Canada R3P 0X7
204-786-8080

DESIGNED BY: EXISTING	CHECKED BY: C. REIMER
DRAWN BY: S. FUNK	APPROVED BY: C. REIMER
SCALE: NTS	RELEASED FOR CONSTRUCTION BY:
DATE: 2012/12/14	DATE:
CONSULTANT NO.:	

ENGINEER'S SEAL

PRELIMINARY
NOT TO BE USED FOR CONSTRUCTION

Winnipeg
THE CITY OF WINNIPEG
WATER AND WASTE DEPARTMENT

SOUTH END WATER POLLUTION CONTROL CENTRE
SECONDARY CLARIFIERS
PROCESS & INSTRUMENTATION DIAGRAM
WASTE ACTIVATED SLUDGE PUMPS P-S202 & P-S203
PROPOSED IDENTIFICATION

CITY DRAWING NUMBER	SHEET	REV.	SIZE
1-0102S-SK10	001	00	A1

A1 SIZE - 594mm x 841mm

LAST SAVE: 2013/06/03 - 1:58pm
PATH: M:\510276\4ENG\49PRC\DD - General DWG\1-0102S-SK10-001-00.dwg

1-0102S-SK10-001-00.dwg

A1 SIZE – 594mm x 841mm

KEY ELEVATIONS:	
LOW BASEMENT	224.64m
WEIR OVERFLOW	222.874m

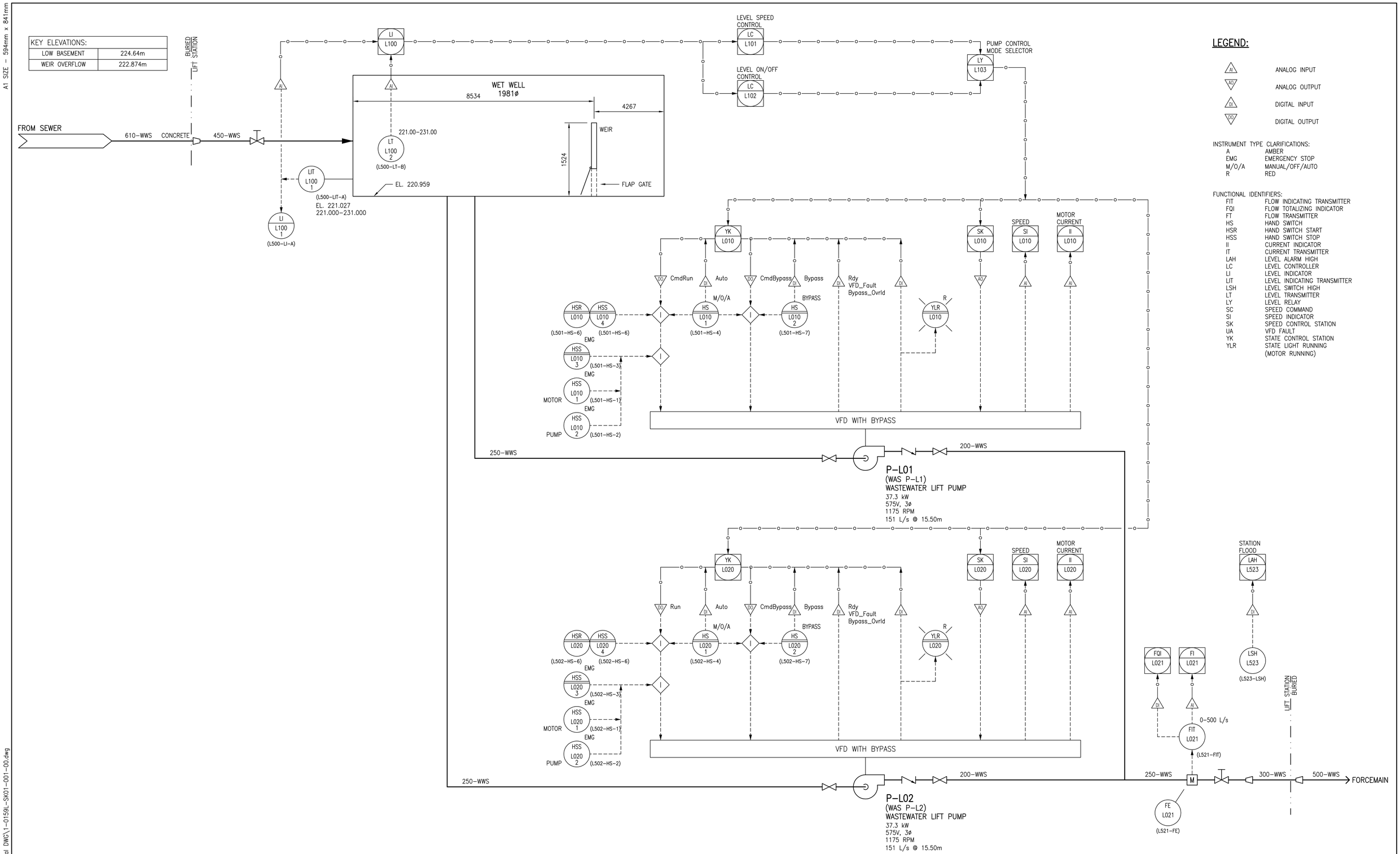

LEGEND:

AI	ANALOG INPUT
AO	ANALOG OUTPUT
DI	DIGITAL INPUT
DO	DIGITAL OUTPUT

INSTRUMENT TYPE CLARIFICATIONS:

A	AMBER
EMG	EMERGENCY STOP
M/O/A	MANUAL/OFF/AUTO
R	RED

FUNCTIONAL IDENTIFIERS:

FIT	FLOW INDICATING TRANSMITTER
FQI	FLOW TOTALIZING INDICATOR
FT	FLOW TRANSMITTER
HS	HAND SWITCH
HSR	HAND SWITCH START
HSS	HAND SWITCH STOP
II	CURRENT INDICATOR
IT	CURRENT TRANSMITTER
LAH	LEVEL ALARM HIGH
LC	LEVEL CONTROLLER
LI	LEVEL INDICATOR
LIT	LEVEL INDICATING TRANSMITTER
LSH	LEVEL SWITCH HIGH
LT	LEVEL TRANSMITTER
LY	LEVEL RELAY
SC	SPEED COMMAND
SI	SPEED INDICATOR
SK	SPEED CONTROL STATION
UA	VFD FAULT
YK	STATE CONTROL STATION
YLR	STATE LIGHT RUNNING (MOTOR RUNNING)

NOTES:

1. ALL INSTRUMENTS SHOWN IN AN AUXILIARY LOCATION ARE IN THE CORRESPONDING VFD PANEL.
2. DRAWING 1-0159L-P0001 REPRESENTS THE CURRENT P&ID AS PER THE EXISTING FACILITY DOCUMENTATION. THIS DRAWING WAS CREATED UNDER THE IDENTIFICATION STANDARD PROJECT AS A SAMPLE DRAWING.

APEGM Certificate of Authorization
SNC-Lavalin Inc.
No. 4489

NO.	REVISIONS	DATE	DESIGN	CHECK
00	ISSUED WITH IDENTIFICATION STANDARD	2013/05/27	–	CJR

SNC·LAVALIN
SNC-LAVALIN INC.
148 Nature Park Way
Winnipeg, MB, Canada R3P 0X7
204-786-8080

DESIGNED BY: EXISTING	CHECKED BY: C. REIMER
DRAWN BY: S. FUNK	APPROVED BY: C. REIMER
SCALE: NTS	RELEASED FOR CONSTRUCTION BY:
DATE: 2013/01/28	DATE:
CONSULTANT NO.:	

ENGINEER'S SEAL

PRELIMINARY
NOT TO BE USED FOR CONSTRUCTION

Winnipeg
THE CITY OF WINNIPEG
WATER AND WASTE DEPARTMENT

MARION WASTEWATER PUMPING STATION

PROCESS & INSTRUMENTATION DIAGRAM
WASTEWATER PUMPING

CITY DRAWING NUMBER	SHEET	REV.	SIZE
1-0159L-SK01	001	00	A1

DRAWING NUMBER	REFERENCE DRAWINGS

LAST SAVE: 2013/06/03 – 1:59pm
PATH: M:\510276\4ENG\49PRC\DD – General DWG\1-0159L-SK01-001-00.dwg

1-0159L-SK01-001-00.dwg

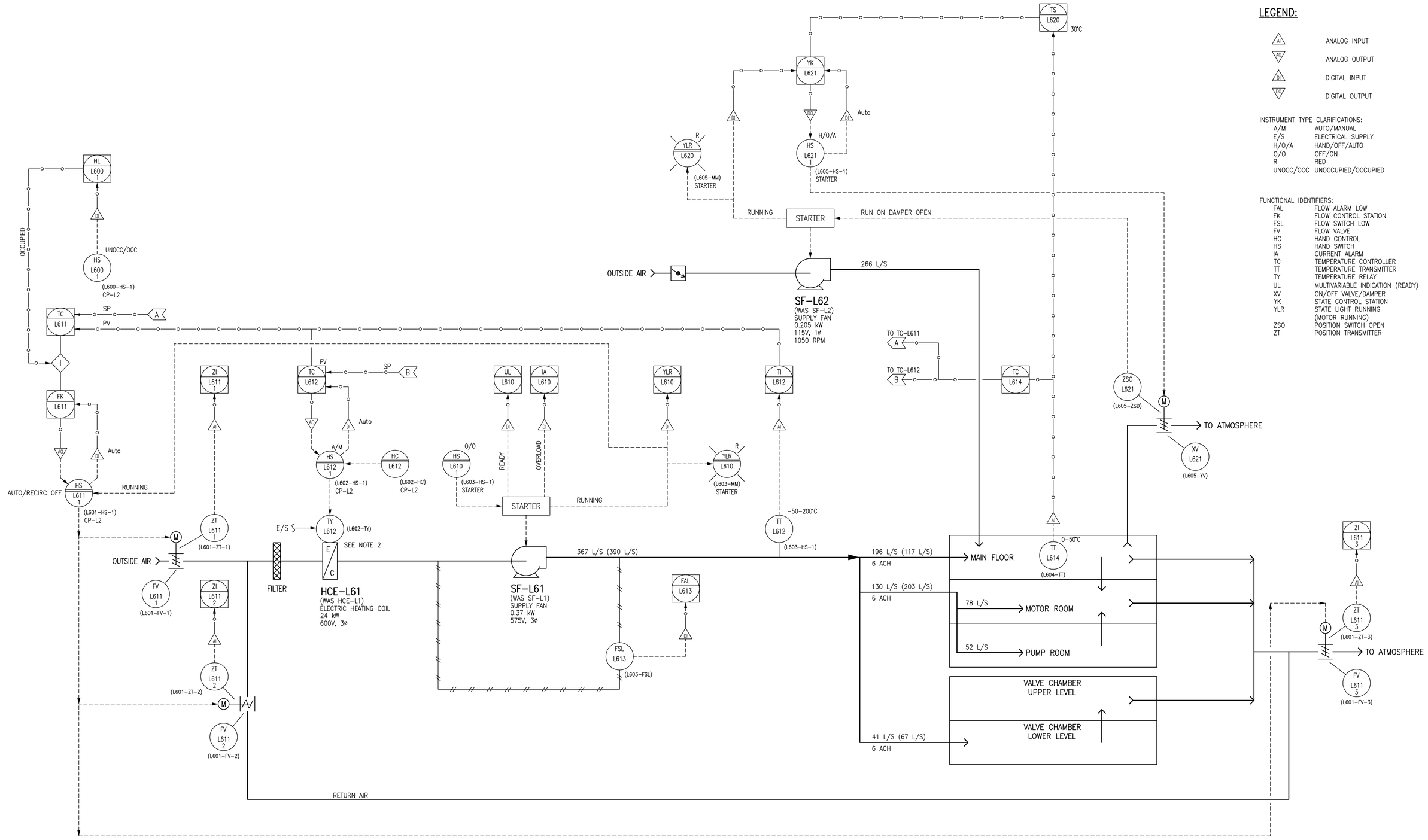

LEGEND:

AI	ANALOG INPUT
AO	ANALOG OUTPUT
DI	DIGITAL INPUT
DO	DIGITAL OUTPUT

INSTRUMENT TYPE CLARIFICATIONS:

A/M	AUTO/MANUAL
E/S	ELECTRICAL SUPPLY
H/O/A	HAND/OFF/AUTO
O/O	OFF/ON
R	RED
UNOCC/OCC	UNOCCUPIED/OCCUPIED

FUNCTIONAL IDENTIFIERS:

FAL	FLOW ALARM LOW
FK	FLOW CONTROL STATION
FSL	FLOW SWITCH LOW
FV	FLOW VALVE
HC	HAND CONTROL
HS	HAND SWITCH
IA	CURRENT ALARM
TC	TEMPERATURE CONTROLLER
TT	TEMPERATURE TRANSMITTER
TY	TEMPERATURE RELAY
UL	MULTIVARIABLE INDICATION (READY)
XV	ON/OFF VALVE/DAMPER
YK	STATE CONTROL STATION
YLR	STATE LIGHT RUNNING (MOTOR RUNNING)
ZSO	POSITION SWITCH OPEN
ZT	POSITION TRANSMITTER

NOTES:

1. VENTILATION RATE:
   SUMMER: 6 ACH, 0% RECIRC
   WINTER UNOCCUPIED: 6 ACH, 75% RECIRC
   WINTER OCCUPIED: 6 ACH, 0% RECIRC
2. HCE-L61 CONTAINS INTEGRAL HIGH TEMPERATURE AND LOW AIR FLOW CUTOUTS.
3. SF-L62 TURNS ON WHEN THE ROOM TEMPERATURE EXCEEDS 30°C.
4. VENTILATION FLOW RATES IN PARENTHESIS ARE ACTUAL VALUES BASED UPON THE AIR BALANCING REPORT.
5. DRAWING 1-0159L-P0002 REPRESENTS THE CURRENT P&ID AS PER THE EXISTING FACILITY DOCUMENTATION. THIS DRAWING WAS CREATED UNDER THE IDENTIFICATION STANDARD PROJECT AS A SAMPLE DRAWING.

APEGM Certificate of Authorization
SNC-Lavalin Inc.
No. 4489

DRAWING NUMBER	REFERENCE DRAWINGS

NO.	REVISIONS	DATE	DESIGN	CHECK
00	ISSUED WITH IDENTIFICATION STANDARD	2013/05/27	–	CJR

SNC·LAVALIN
SNC-LAVALIN INC.
148 Nature Park Way
Winnipeg, MB, Canada R3P 0X7
204-786-8080

DESIGNED BY: EXISTING	CHECKED BY: C. REIMER
DRAWN BY: S. FUNK	APPROVED BY: C. REIMER
SCALE: NTS	RELEASED FOR CONSTRUCTION BY:
DATE: 2013/05/27	DATE:
CONSULTANT NO.:	

ENGINEER'S SEAL

PRELIMINARY
NOT TO BE USED FOR CONSTRUCTION

Winnipeg
THE CITY OF WINNIPEG
WATER AND WASTE DEPARTMENT

MARION WASTEWATER PUMPING STATION

PROCESS & INSTRUMENTATION DIAGRAM
VENTILATION

CITY DRAWING NUMBER	SHEET	REV.	SIZE
1-0159L-SK02	001	00	A1

1-0159L-SK02-001-00.dwg

A1 SIZE – 594mm x 841mm

LAST SAVE: 2013/06/03 – 1:59pm
PATH: M:\510276\4ENG\49PRC\DD – General DWG\1-0159L-SK02-001-00.dwg

A1 SIZE - 594mm x 841mm

EQUIPMENT SYMBOLS

- PUMP
- RECIPROCATING COMPRESSOR
- ELECTRIC MOTOR
- HEAT EXCHANGER
- INJECTOR

ACCESSORY DEVICE SYMBOLS

- ORIFICE PLATE
- VENTURI TUBE
- M — MAGNETIC FLOW METER
- FLEX PIPE
- FILTER / STRAINER

VALVE SYMBOLS

- VALVE – GENERAL SYMBOL OR GATE VALVE
- NORMALLY CLOSED VALVE
- ANGLE VALVE
- THREE WAY VALVE
- FOUR WAY VALVE (ARROWS INDICATE FAILURE OR UNACTUATED FLOW PATH)
- BUTTERFLY VALVE
- BALL VALVE
- PLUG VALVE
- CONE VALVE
- GLOBE VALVE
- NEEDLE VALVE
- CHECK VALVE
- DIAPHRAGM VALVE
- PINCH VALVE
- PRESSURE REGULATOR, SELF CONTAINED
- BACK PRESSURE REGULATOR, SELF CONTAINED
- FCV — FLOW CONTROL VALVE RESTRICTED FLOW LEFT FREE FLOW RIGHT
- BACKFLOW PREVENTER
- RP — REDUCED PRESSURE BACKFLOW PREVENTER

ACTUATOR SYMBOLS

- DIAPHRAGM ACTUATOR
- CYLINDER ACTUATOR
- M — MOTOR ACTUATOR
- S — SOLENOID ACTUATOR
- FLOAT ACTUATOR
- HAND ACTUATOR
- PRESSURE RELIEF

ACTUATOR DETAIL SYMBOLS

- POSITIONER
- FAIL CLOSED
- FAIL OPEN

PIPING DETAIL SYMBOLS

- REDUCER
- DRAIN
- STRAINER
- SCREWED CAP
- HOSE CONNECTION
- BLIND FLANGE
- SUCTION GUIDE

CONNECTING ARROWS

- 1-0630M-P0001 — PROCESS/SIGNAL CONTINUATION ON INDICATED DRAWING
- A — SIGNAL CONTINUATION ON SAME DRAWING

INSTRUMENT LINE SYMBOLS

- INSTRUMENT SUPPLY OR CONNECTION TO PROCESS
- PNEUMATIC SIGNAL
- ELECTRIC SIGNAL
- HYDRAULIC SIGNAL
- CAPILLARY TUBE
- ELECTROMAGNETIC OR SONIC SIGNAL GUIDED
- ELECTROMAGNETIC OR SONIC SIGNAL UNGUIDED
- DATA / SERIAL LINK (OPTIONAL)

PID STANDARDS

1. DRAWINGS UTILIZE CITY OF WINNIPEG STANDARDS FOR BORDER AND TITLE BLOCK. ALL DRAWINGS ARE PRODUCED ON AUTOCAD (LATEST REV., R2000 OR LATER).
2. ALL UNITS ARE IN METRIC, EXCEPT AS NOTED OTHERWISE. ALL DIMENSIONS SHOWN ARE IN MILLIMETERS (mm).
3. DRAWING CONTENT GENERALLY CONFORMS WITH ISA-5.1 STANDARD.
4. PID'S INDICATE MAJOR PROCESS PIPING AND EQUIPMENT AND ASSOCIATED LOCAL INSTRUMENTATION, SCADA PLC AND OTHER PROCESS I/O.
5. EQUIPMENT INCLUDING VESSELS, DRUMS, EXCHANGERS, HEATERS, PUMPS, COMPRESSORS, ETC. ARE ARRANGED IN SEQUENCE WITH PRINCIPLE FUNCTIONS AND FLOWS.
6. ALL MAJOR EQUIPMENT INCLUDING PUMPS, COMPRESSORS, TANKS, ETC. ARE LABELED AS TO FUNCTION WITH DESIGN SIZES AND RATINGS.
7. ALL PROCESS LINES ARE LABELED ACCORDING TO FUNCTION AND SIZE UTILIZING SYSTEM CODES DEFINED HEREIN.
8. EACH SYSTEM INTERCONNECTION POINT BETWEEN DRAWINGS IS LABELED WITH A SOURCE DRAWING NUMBER OR DESTINATION DRAWING NUMBER. ARROWS ON PROCESS PIPING INDICATE DIRECTION OF FLOW BETWEEN DRAWINGS.

INSTRUMENT SYMBOLS

- DISCRETE INSTRUMENTS FIELD MOUNTED
- DISCRETE INSTRUMENTS PRIMARY LOCATION (CONTROL ROOM) FRONT PANEL MOUNTED
- DISCRETE INSTRUMENTS PRIMARY LOCATION (CONTROL ROOM) REAR PANEL MOUNTED
- DISCRETE INSTRUMENTS SECONDARY LOCATION (NORMALLY ACCESSIBLE) FRONT PANEL MOUNTED
- DISCRETE INSTRUMENTS SECONDARY LOCATION (NORMALLY ACCESSIBLE) REAR PANEL MOUNTED
- PRIMARY CONTROL SYSTEM FUNCTION
- SECONDARY OR SAFETY CONTROL SYSTEM FUNCTION PRIMARY LOCATION DATA ACCESSIBLE TO OPERATOR
- SECONDARY OR SAFETY CONTROL SYSTEM FUNCTION AUXILIARY LOCATION DATA NOT ACCESSIBLE TO OPERATOR
- SECONDARY OR SAFETY CONTROL SYSTEM FUNCTION AUXILIARY LOCATION DATA ACCESSIBLE TO OPERATOR
- SECONDARY OR SAFETY CONTROL SYSTEM FUNCTION AUXILIARY LOCATION DATA NOT ACCESSIBLE TO OPERATOR
- R — PILOT LIGHT (FIELD)
- R — PILOT LIGHT (CONTROL ROOM)
- R — PILOT LIGHT (FIELD PANEL)
- R — PILOT LIGHT (FIELD PANEL, REAR MOUNTED)

W =
R = RED
G = GREEN
A = AMBER
B = BLUE
Y = YELLOW
WHITE

- FC — HH, H, L, LL — PROCESS VARIABLE ALARMS
- OTHER COMPUTER FUNCTION
- SUBCOMPONENT OR DISCRETE INSTRUMENTS FIELD MOUNTED NO LOOP IDENTIFIER
- I — INTERLOCK
- R — RESET
- K — KEYED INTERLOCK
- P — PURGE
- Σ — SUMMATION
- I/I — CURRENT / CURRENT RELAY
- E/P — VOLTAGE / PNEUMATIC RELAY
- AI — ANALOG INPUT
- AO — ANALOG OUTPUT
- DI — DIGITAL INPUT
- DO — DIGITAL OUTPUT

NOTES:

1. THIS DRAWING REPRESENTS THE P&ID STANDARDS BASED ON THE CITY'S IDENTIFICATION STANDARD REV. 00, RELEASED IN 2013. REFER TO DRAWING 1-0630M-A0001 FOR THE PREVIOUS P&ID STANDARDS.

APEGM Certificate of Authorization
SNC-Lavalin Inc.
No. 4489

DRAWING NUMBER	REFERENCE DRAWINGS

NO.	REVISIONS	DATE	DESIGN	CHECK
00	ISSUED WITH IDENTIFICATION STANDARD	2013/06/03	VE	CJR

SNC·LAVALIN
SNC-LAVALIN INC.
148 Nature Park Way
Winnipeg, MB, Canada R3P 0X7
204-786-8080

DESIGNED BY: V. ELIMBAN	CHECKED BY: C. REIMER
DRAWN BY: S. FUNK	APPROVED BY: C. REIMER
SCALE: NTS	RELEASED FOR CONSTRUCTION BY:
DATE: 2013/02/06	DATE:
CONSULTANT NO.: 510276-0000-49DD-0001	

ENGINEER'S SEAL

PRELIMINARY
NOT TO BE USED FOR CONSTRUCTION

Winnipeg
THE CITY OF WINNIPEG
WATER AND WASTE DEPARTMENT

MACLEAN PUMPING STATION

PROCESS & INSTRUMENTATION DIAGRAM
LEGEND & DETAILS

CITY DRAWING NUMBER	SHEET	REV.	SIZE
1-0630A-SK01	001	00	A1

1-0630A-SK01-001-00.dwg

LAST SAVE: 2013/06/03 - 1:59pm
PATH: M:\510276\4ENG\49PRC\DD - General DWG\1-0630A-SK01-001-00.dwg

A1 SIZE – 594mm x 841mm

INSTRUMENT FUNCTIONAL DESIGNATIONS

	FIRST LETTER		SUCCEEDING LETTERS		
	MEASURED OR INITIATING VARIABLE	MODIFIER	READOUT OR PASSIVE FUNCTION	OUTPUT FUNCTION	MODIFIER
A	ANALYSIS		ALARM		
B	BURNER, COMBUSTION				
C	CONDUCTIVITY			CONTROL	CLOSE
D	DENSITY	DIFFERENCE, DIFFERENTIAL			DEVIATION
E	VOLTAGE		SENSOR, PRIMARY ELEMENT		
F	FLOW, FLOW RATE	RATIO			FAILURE/FAULT
G			GLASS, GAUGE VIEWING DEVICE		
H	HAND (MANUAL)				HIGH
I	CURRENT		INDICATE		
J	POWER		SCAN		
K	TIME, SCHEDULE	TIME RATE OF CHANGE		CONTROL STATION	
L	LEVEL		LIGHT		LOW
M	MOISTURE, HUMIDITY				MIDDLE, INTERMEDIATE
N					
O	TORQUE		ORIFICE, RESTRICTION		OPEN
P	PRESSURE		POINT (TEST CONNECTION)		
Q	QUANTITY	INTEGRATE, TOTALIZE	INTEGRATE, TOTALIZE		
R	RADIATION		RECORD		RUN
S	SPEED, FREQUENCY	SAFETY		SWITCH	STOP
T	TEMPERATURE			TRANSMITTER	
U	MULTIVARIABLE		MULTIFUNCTION	MULTIFUNCTION	
V	UNCLASSIFIED			VALVE, DAMPER, LOUVER	
W	WEIGHT, FORCE		WELL, PROBE		
X	UNCLASSIFIED	X AXIS	UNCLASSIFIED	UNCLASSIFIED	UNCLASSIFIED
Y	EVENT, STATE, OR PRESENCE	Y AXIS		AUXILIARY DEVICE	
Z	POSITION, DIMENSION	Z AXIS, SAFETY INSTRUMENTED SYSTEM		DRIVER, ACTUATOR, UNCLASSIFIED FINAL CONTROL ELEMENT	

NOTES FOR INSTRUMENT AND DEVICE IDENTIFICATION TABLE:

1. THE LETTER X IS TO BE DEFINED AT THE TIME OF USE, AND MAY BE USED FOR MULTIPLE DEFINITIONS WHERE NO OTHER LETTER IS APPLICABLE.

COMMON INSTRUMENT FIELD DEVICE IDENTIFIERS

IDENTIFIER	DEFINITION	IDENTIFIER	DEFINITION
AA	ANALYSIS ALARM	PG	PRESSURE GAUGE
AAH	ANALYSIS ALARM – HIGH	PI	PRESSURE INDICATOR
AAHH	ANALYSIS ALARM – HIGH–HIGH	PIC	PRESSURE INDICATING CONTROLLER
AE	ANALYSIS ELEMENT	PIT	PRESSURE INDICATING TRANSMITTER
AIT	ANALYSIS INDICATING TRANSMITTER (ANALYTIC INST.)	PR	PRESSURE RECORDER
AK	ANALYSIS (AMPLER) CONTROL STATION	PS	PRESSURE SWITCH
ASH	ANALYSIS SWITCH – HIGH	PSH	PRESSURE SWITCH HIGH
ASHH	ANALYSIS SWITCH – HIGH–HIGH	PSHH	PRESSURE SWITCH HIGH (2ND STAGE)
AT	ANALYSIS TRANSMITTER (ANALYTIC INST.)	PSL	PRESSURE SWITCH LOW
BK	BURNER CONTROL STATION	PSV	PRESSURE SAFETY VALVE (RELIEF)
BCS	BURNER FLAME SWITCH	PT	PRESSURE TRANSMITTER
DE	DENSITY ELEMENT	PY	PRESSURE RELAY (I/I CONVERTER)
DR	DENSITY RECORDER	SI	SPEED INDICATOR
DT	DENSITY TRANSMITTER	SK	SPEED CONTROL STATION
DX	DENSITY SOURCE (X = SOURCE)	ST	SPEED/VELOCITY TRANSMITTER
EE	VOLTAGE ELEMENT/TRANSFORMER	TE	TEMPERATURE ELEMENT
EG	VOLTAGE VIEWING DEVICE (CAPACITOR VOLTAGE INDICATOR)	TG	TEMPERATURE GAUGE
EI	VOLTAGE INDICATOR	TI	TEMPERATURE INDICATOR
EL	VOLTAGE LIGHT	TIC	TEMPERATURE INDICATING CONTROLLER
ET	VOLTAGE TRANSMITTER	TIT	TEMPERATURE INDICATING TRANSMITTER
FAL	FLOW ALARM LOW	TR	TEMPERATURE RECORDER
FE	FLOW ELEMENT	TS	TEMPERATURE SWITCH
FI	FLOW INDICATOR	TSH	TEMPERATURE SWITCH HIGH
FIC	FLOW INDICATING CONTROLLER	TSL	TEMPERATURE SWITCH LOW
FIT	FLOW INDICATING TRANSMITTER	TT	TEMPERATURE TRANSMITTER
FQI	FLOW TOTALIZING INDICATOR	TV	TEMPERATURE VALVE
FQY	FLOW TOTALIZING/INTEGRATING RELAY	TW	TEMPERATURE THERMOWELL
FR	FLOW RECORDER	TY	TEMPERATURE RELAY (SOLENOID VALVE OR M/P)
FSL	FLOW SWITCH LOW	VE	VIBRATION ELEMENT
FT	FLOW TRANSMITTER	VI	VIBRATION INDICATOR
FV	FLOW VALVE	VIT	VIBRATION INDICATING TRANSMITTER
FZ	FLOW METER ULTRASONIC GENERATOR	VT	VIBRATION TRANSMITTER
GE	GAS ELEMENT	XV	ON/OFF VALVE (TYPICAL)
GS	GAS SWITCH MODULE	YL	STATE INDICATOR
HK	HAND CONTROL STATION	ZI	POSITION INDICATOR
HS	HAND SWITCH	ZS	POSITION SWITCH
HSR	HAND SWITCH – START/RUN	ZSC	POSITION SWITCH CLOSED (LIMIT SWITCH)
HSS	HAND SWITCH – STOP	ZSO	POSITION SWITCH OPEN (LIMIT SWITCH)
HV	HAND VALVE	ZT	POSITION TRANSMITTER
IS	CURRENT SWITCH		
IE	CURRENT ELEMENT/TRANSFORMER		
II	CURRENT INDICATOR		
IY	CURRENT RELAY		
JIT	POWER INDICATING TRANSMITTER		
KY	TIMER RELAY		
LCV	LEVEL CONTROL VALVE		
LE	LEVEL ELEMENT		
LI	LEVEL INDICATOR		
LIC	LEVEL INDICATING CONTROLLER		
LIT	LEVEL INDICATING TRANSMITTER		
LR	LEVEL RECORDER		
LSL	LEVEL SWITCH LOW		
LSH	LEVEL SWITCH HIGH		
LSHL	LEVEL SWITCH HIGH/LOW		
LT	LEVEL TRANSMITTER		
LV	LEVEL VALVE		
LY	LEVEL RELAY (I/I CONVERTER)		
ME	MOISTURE SENSOR		
MT	MOISTURE TRANSMITTER		
OSH	TORQUE SWITCH HIGH		
PCV	PRESSURE CONTROL VALVE		
PE	PRESSURE ELEMENT		

NOTES FOR INSTRUMENT FIELD DEVICE IDENTIFIERS:

1. THE LAST IDENTIFIER LETTER IS IN SOME CASES OPTIONAL (EG. FSL)
2. THIS TABLE IS DERIVED FROM THE INSTRUMENT & DEVICE IDENTIFICATION TABLE, AND IS NOT EXHAUSTIVE.

INSTRUMENT TYPE CLARIFICATION

IDENTIFIER	DEFINITION
(N)	N MULTIPLE INSTRUMENTS
AA	AUDIBLE ALARM
ACC	ACCELERATION
A/M	AUTO/MANUAL
C/H	COMPUTER/HAND
C/L	COMPUTER/LOCAL
CLS	CLOSE
C/O	COMPUTER/OFF
COB	COMPUTER/OFF/BYPASS
COH	COMPUTER/OFF/HAND
COT	COMPUTER/OFF/TIME
DCS	DISTRIBUTED CONTROL SYSTEM
DP	DIFFERENTIAL PRESSURE
DS	DECREASE SPEED
E/R	EXTEND/RETRACT
E/S	EMERGENCY STOP
FOR	FORWARD/OFF/REVERSE
H/A	HAND/AUTO
HOA	HAND/OFF/AUTO
HOR	HAND/OFF/REMOTE
I/D	INCREASE/DECREASE
INT/EXT	INTERNAL/EXTERNAL
IS	INCREASE SPEED
LCP	LOCAL CONTROL PANEL
LD	LOCKABLE DISCONNECT
LJB	LOCAL JUNCTION BOX
L/O	LOCAL/OFF
LOR	LOCAL/OFF/REMOTE
LOS	LOCK OFF STOP
L/R	LOCAL/REMOTE
LSR	LASER
MAG	MAGNETIC
O/A	OFF/AUTO
O/C	OPEN/CLOSE
O/M	OFF/MAINTENANCE
O/O	OFF/ON
OPN	OPEN
PROX	PROXIMITY
RAD	RADAR
RST	RESET
RTD	RESISTIVE TEMPERATURE DEVICE
SEL	SELECTOR
S/F	SLOW/FAST
SOF	SLOW/OFF/FAST
SOL	SOLENOID
S/S	START/STOP
S/W	SUMMER/WINTER
TC	THERMOCOUPLE
US	ULTRASONIC
VEL	VELOCITY
ΔT	THERMAL DISPERSION

INSTRUMENT IDENTIFICATION

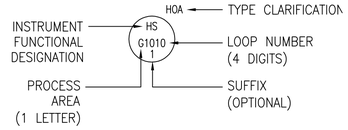

DRAWING NUMBER	REFERENCE DRAWINGS

APEGM Certificate of Authorization
SNC-Lavalin Inc.
No. 4489

NO.	REVISIONS	DATE	DESIGN	CHECK
00	ISSUED WITH IDENTIFICATION STANDARD	2013/06/03	VE	CJR

SNC·LAVALIN
SNC–LAVALIN INC.
148 Nature Park Way
Winnipeg, MB, Canada R3P 0X7
204–786–8080

DESIGNED BY: V. ELIMBAN	CHECKED BY: C. REIMER
DRAWN BY: S. FUNK	APPROVED BY: C. REIMER
SCALE: NTS	RELEASED FOR CONSTRUCTION BY:
DATE: 2013/02/06	DATE:
CONSULTANT NO.: 510276–0000–49DD–0002	

ENGINEER'S SEAL

PRELIMINARY
NOT TO BE USED FOR CONSTRUCTION

Winnipeg
THE CITY OF WINNIPEG
WATER AND WASTE DEPARTMENT

MACLEAN PUMPING STATION

PROCESS AND INSTRUMENTATION DIAGRAM
LEGEND AND DETAILS

CITY DRAWING NUMBER	SHEET	REV.	SIZE
1–0630A–SK01	002	00	A1

1–0630A–SK01–002–00.dwg

LAST SAVE: 2013/06/03 – 2:00pm
PATH: M:\510276\4ENG\49PRC\DD – General DWG\1–0630A–SK01–002–00.dwg

A1 SIZE – 594mm x 841mm

PROCESS AREA IDENTIFIERS

IDENTIFIER	DEFINITION
A	GENERAL OR PROCESS AREA IS NOT APPLICABLE
C	CHLORINE ROOMS
M	MAIN PUMPING STATION BUILDING (EXCEPT CHLORINE ROOMS)
R	RESERVOIR
Y	YARD PIPING AND VALVE CHAMBERS

EQUIPMENT IDENTIFICATION

EQUIPMENT FUNCTIONAL DESIGNATION
PROCESS AREA
EQUIPMENT NUMBER

P – M 021

PROCESS LINE DESIGNATION

NOMINAL LINE SIZE
FLUID COMMODITY CODE
PIPE SPECIFICATION CODE (OPTIONAL)
LINE NUMBER (OPTIONAL)

600–TRW–CS01–1251

IMPERIAL PIPE SIZE CHART (METRIC EQUIVALENT)

IN	MM	IN	MM
1/8	3	14	350
1/4	6	16	400
3/8	10	18	450
1/2	12	20	500
3/4	20	22	550
1	25	24	600
1 1/4	32	26	650
1 1/2	38	28	700
2	50	30	750
2 1/2	65	32	800
3	75	34	850
3 1/2	90	36	900
4	100	38	950
4 1/2	112	40	1000
5	125	42	1050
6	150	44	1100
7	175	46	1150
8	200	48	1200
9	225	50	1250
10	250	52	1300
11	275	54	1350
12	300		

EQUIPMENT FUNCTIONAL DESIGNATIONS MECHANICAL AND PROCESS EQUIPMENT

IDENTIFIER	DEFINITION	NOTES
AD	AIR DRYER	
AHU	AIR HANDLING UNIT	INCLUDES MAKE–UP AIR UNIT
B	BLOWER	
BD	BALANCE DAMPER	
BFP	BACK FLOW PREVENTOR	
BLR	BOILER	
CAL	CALIBRATION COLUMN	
CC	COOLING COIL	
CDR	CONDENSOR	
CHLR	CHILLER	
CMP	COMPRESSOR	
CRN	CRANE	
CT	COOLING TOWER	
CU	CONDENSING UNIT	
CV	CHECK VALVE	
EF	EXHAUST FAN	
F	FAN – GENERAL	
FA	FLAME ARRESTOR	
FC	FAN COIL	
FD	FIRE DAMPER	UTILIZE SAME EQUIPMENT NUMBER AS AIR HANDLER
FDR	FEEDER	EXAMPLES SCREW FEEDER, CHLORINATOR, GLYCOL MAKE–UP UNIT
FEX	FIRE EXTINGUISHER	
FG	FLAP GATE	
FIL	FILTER	
GR	GRILLE – GENERAL	
GRD	GRILLE – DIFFUSER	
HTR	HEATER	GENERAL HEATERS, RADIANT HEATERS, ETC.
HC	HEATING COIL	
HCE	HEATING COIL, ELECTRIC	
HE	HEAT EXCHANGER	
HO	HOIST	
HP	HEAT PUMP	
HRC	HEAT RECOVERY COIL	
HV	HAND/MANUAL VALVE	
INJ	INJECTOR	
MXR	MIXER	
OD	OVERHEAD DOOR	
P	PUMP	
S	SKID PACKAGE	
SA	SAMPLER	
SF	SUPPLY FAN	
SL	STOP LOGS	
SLG	SLUICE GATE	
STR	STRAINER	
TK	TANK	
U	MISCELLANEOUS	E.G. WATER SOFTENER
UH	UNIT HEATER	
V	VESSEL, PRESSURE VESSEL	E.G. AIR RECEIVER, GLYCOL EXPANSION TANK
W	WEIR	

FLUID COMMODITY CODES

IDENTIFIER	DEFINITION
CA	COMPRESSED AIR
CDR	CONDENSER WATER RETURN
CDS	CONDENSER WATER SUPPLY
CHR	CHILLED WATER RETURN
CHS	CHILLED WATER SUPPLY
CL2	CHLORINE
CLS	CHLORINE SOLUTION
CON	CONDENSATE
CWR	COOLING WATER RETURN
CWS	COOLING WATER SUPPLY
D	DRAIN
DCW	DOMESTIC COLD WATER
DHW	DOMESTIC HOT WATER
EE	ENGINE EXHAUST
ES	ELECTRICAL SUPPLY
GR	GLYCOL RETURN
GS	GLYCOL SUPPLY
HCO	HYDRAULIC OIL
HDW	HOT DOMESTIC WATER
HFW	HOT FLUSHING WATER
HWR	HOT WATER RETURN
HWS	HOT WATER SUPPLY
IAS	INSTRUMENT AIR SUPPLY
NG	NATURAL GAS
PW	POTABLE WATER
R	REFRIGERANT
RD	ROOF DRAIN
SAM	SAMPLE
SW	SEAL WATER
TRW	TREATED WATER
VTA	VENT TO ATMOSPHERE

DRAWING NUMBER	REFERENCE DRAWINGS

APEGM Certificate of Authorization
SNC-Lavalin Inc.
No. 4489

NO.	REVISIONS	DATE	DESIGN	CHECK
00	ISSUED WITH IDENTIFICATION STANDARD	2013/06/03	VE	CJR

SNC·LAVALIN
SNC–LAVALIN INC.
148 Nature Park Way
Winnipeg, MB, Canada R3P 0X7
204–786–8080

DESIGNED BY: V. ELIMBAN
CHECKED BY: C. REIMER
DRAWN BY: S. FUNK
APPROVED BY: C. REIMER
SCALE: NTS
RELEASED FOR CONSTRUCTION BY:
DATE: 2013/02/06
DATE:
CONSULTANT NO.: 510276–0000–49DD–0003

ENGINEER'S SEAL

PRELIMINARY
NOT TO BE USED FOR CONSTRUCTION

Winnipeg
THE CITY OF WINNIPEG
WATER AND WASTE DEPARTMENT

MACLEAN PUMPING STATION

PROCESS AND INSTRUMENTATION DIAGRAM
LEGEND AND DETAILS

CITY DRAWING NUMBER	SHEET	REV.	SIZE
1–0630A–SK01	003	00	A1

1–0630A–SK01–003–00.dwg

LAST SAVE: 2013/06/03 – 2:00pm
PATH: M:\510276\4ENG\49PRC\DD – General DWG\1–0630A–SK01–003–00.dwg

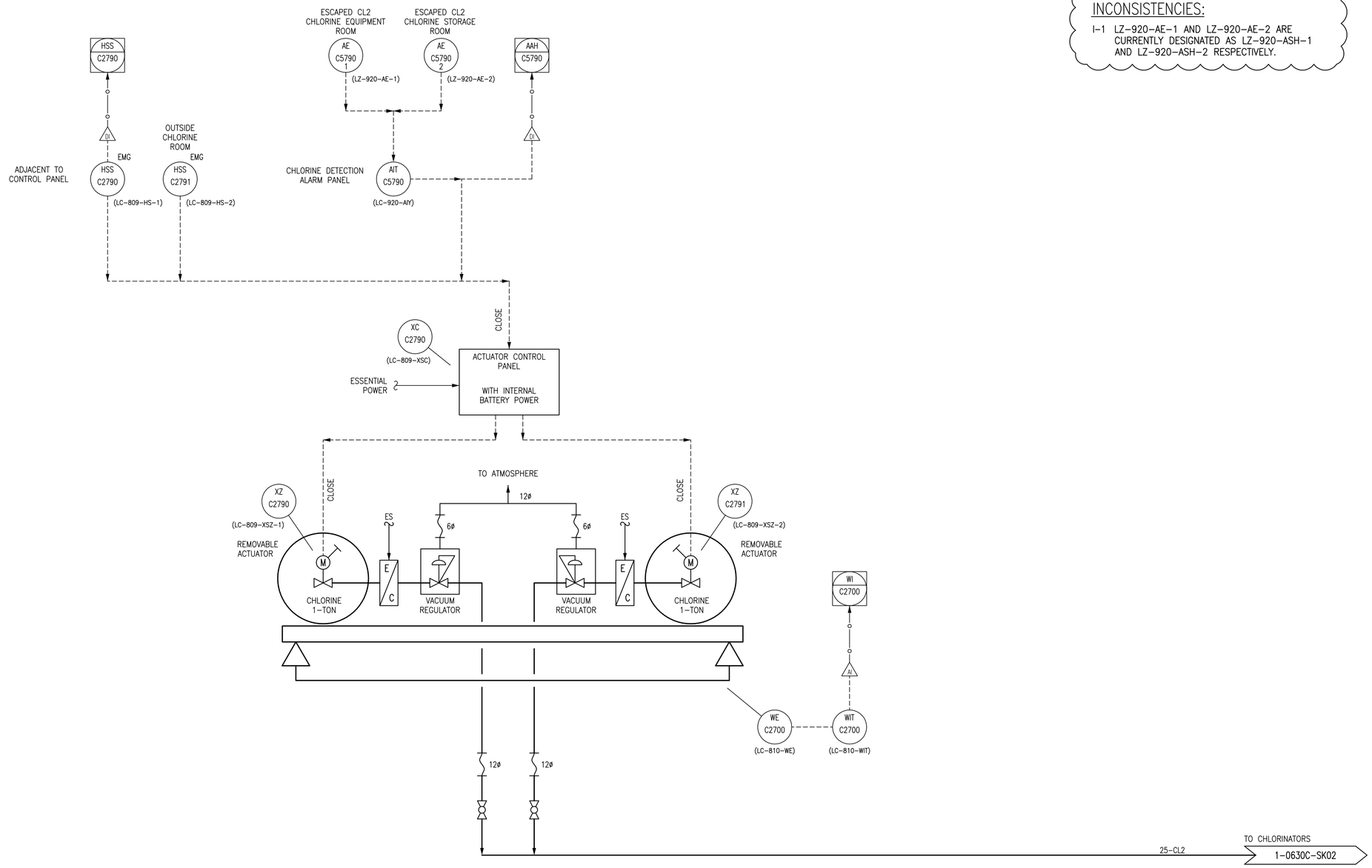

INCONSISTENCIES:

I-1 LZ-920-AE-1 AND LZ-920-AE-2 ARE CURRENTLY DESIGNATED AS LZ-920-ASH-1 AND LZ-920-ASH-2 RESPECTIVELY.

NOTES:

1. DRAWING 1-0630M-A0024 REPRESENTS THE PREVIOUS P&ID. MOST EXISTING DOCUMENTATION IS BASED ON THE IDENTIFICATION SHOWN IN PREVIOUS P&ID.

DRAWING NUMBER	REFERENCE DRAWINGS
1-0630A-SK01	PROCESS & INSTRUMENTATION DIAGRAM LEGEND & DETAILS

APEGM Certificate of Authorization
SNC-Lavalin Inc.
No. 4489

NO.	REVISIONS	DATE	DESIGN	CHECK
00	ISSUED WITH IDENTIFICATION STANDARD	2013/06/03	VE	CJR

SNC·LAVALIN

SNC-LAVALIN INC.
148 Nature Park Way
Winnipeg, MB, Canada R3P 0X7
204-786-8080

DESIGNED BY: EXISTING	CHECKED BY: C. REIMER
DRAWN BY: S. FUNK	APPROVED BY: C. REIMER
SCALE: NTS	RELEASED FOR CONSTRUCTION BY:
DATE: 2012/12/12	DATE:
CONSULTANT NO.: 510276-0000-49DD-0014	

ENGINEER'S SEAL

PRELIMINARY
NOT TO BE USED FOR CONSTRUCTION

Winnipeg
THE CITY OF WINNIPEG
WATER AND WASTE DEPARTMENT

MACLEAN PUMPING STATION

PROCESS & INSTRUMENTATION DIAGRAM
CHLORINE CYLINDER SHUTOFF VALVES

CITY DRAWING NUMBER	SHEET	REV.	SIZE
1-0630C-SK01	001	00	A1

1-0630C-SK01-001-00.dwg

A1 SIZE - 594mm x 841mm

LAST SAVE: 2013/06/03 - 2:01pm
PATH: M:\510276\4ENG\49PRC\DD - General DWG\1-0630C-SK01-001-00.dwg

A1 SIZE - 594mm x 841mm

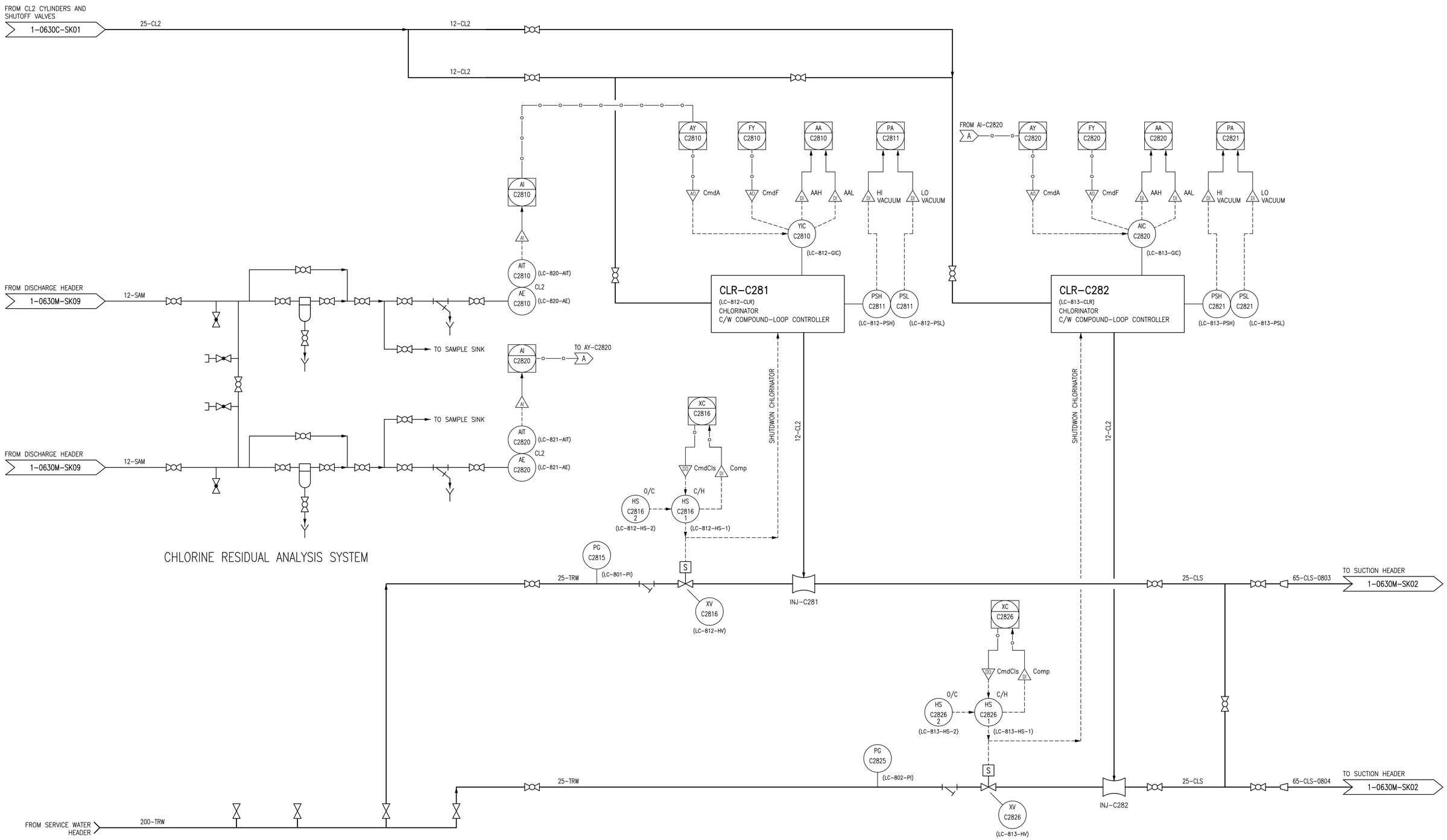

NOTES:

1. DRAWING 1-0630M-A0016 REPRESENTS THE PREVIOUS P&ID. MOST EXISTING DOCUMENTATION IS BASED ON THE IDENTIFICATION SHOWN IN PREVIOUS P&ID.

DRAWING NUMBER	REFERENCE DRAWINGS
1-0630A-SK01	PROCESS & INSTRUMENTATION DIAGRAM LEGEND & DETAILS

APEGM Certificate of Authorization
SNC-Lavalin Inc.
No. 4489

NO.	REVISIONS	DATE	DESIGN	CHECK
00	ISSUED WITH IDENTIFICATION STANDARD	2013/06/03	VE	CJR

SNC·LAVALIN

SNC-LAVALIN INC.
148 Nature Park Way
Winnipeg, MB, Canada R3P 0X7
204-786-8080

DESIGNED BY: EXISTING	CHECKED BY: C. REIMER
DRAWN BY: S. FUNK	APPROVED BY: C. REIMER
SCALE: NTS	RELEASED FOR CONSTRUCTION BY:
DATE: 2012/12/10	DATE:
CONSULTANT NO.: 510276-0000-49DD-0015	

ENGINEER'S SEAL

PRELIMINARY
NOT TO BE USED FOR CONSTRUCTION

Winnipeg
THE CITY OF WINNIPEG
WATER AND WASTE DEPARTMENT

MACLEAN PUMPING STATION

PROCESS & INSTRUMENTATION DIAGRAM
CHLORINATION SYSTEM

CITY DRAWING NUMBER	SHEET	REV.	SIZE
1-0630C-SK02	001	00	A1

1-0630C-SK02-001-00.dwg

LAST SAVE: 2013/06/03 - 2:02pm
PATH: M:\510276\ENG\49PRC\DD - General DWG\1-0630C-SK02-001-00.dwg

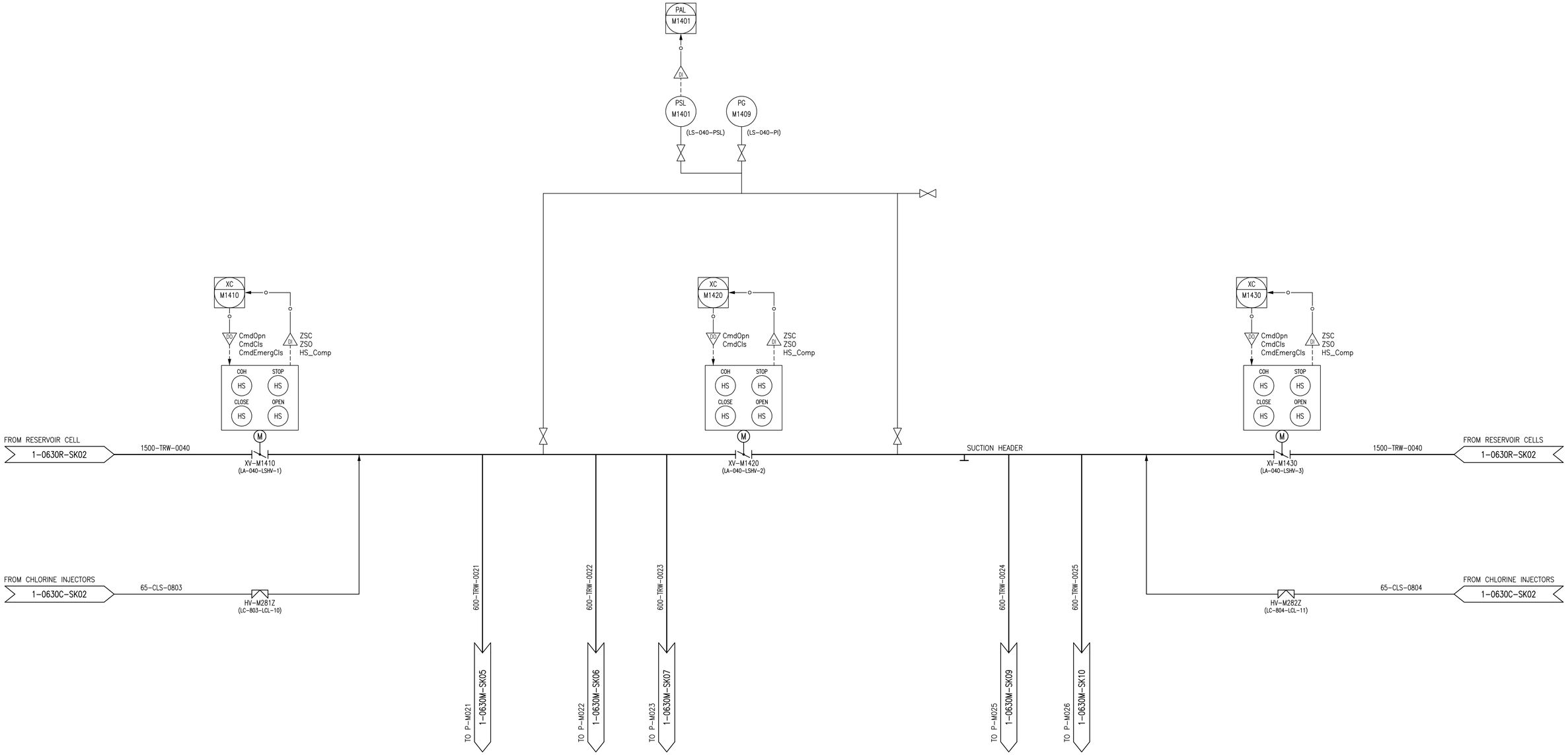

NOTES:

1. DRAWING 1-0630M-A0004 REPRESENTS PREVIOUS P&ID. MOST EXISTING DOCUMENTATION IS BASED ON THE IDENTIFICATION SHOWN IN PREVIOUS P&ID.

DRAWING NUMBER	REFERENCE DRAWINGS
1-0630A-SK01	PROCESS & INSTRUMENTATION DIAGRAMS LEGEND & DETAILS

APEGM Certificate of Authorization
SNC-Lavalin Inc.
No. 4489

NO.	REVISIONS	DATE	DESIGN	CHECK
00	ISSUED WITH IDENTIFICATION STANDARD	2013/06/03	VE	CJR

SNC·LAVALIN
SNC-LAVALIN INC.
148 Nature Park Way
Winnipeg, MB, Canada R3P 0X7
204-786-8080

DESIGNED BY: EXISTING	CHECKED BY: C. REIMER
DRAWN BY: MJ. PERSSON	APPROVED BY: C. REIMER
SCALE: NTS	RELEASED FOR CONSTRUCTION BY:
DATE: 2012/11/15	DATE:
CONSULTANT NO.: 510276-0000-49DD-0006	

ENGINEER'S SEAL

PRELIMINARY
NOT TO BE USED FOR CONSTRUCTION

Winnipeg
THE CITY OF WINNIPEG
WATER AND WASTE DEPARTMENT

MACLEAN PUMPING STATION

PROCESS & INSTRUMENTATION DIAGRAM
SUCTION HEADER

CITY DRAWING NUMBER	SHEET	REV.	SIZE
1-0630M-SK02	001	00	A1

1-0630M-SK02-001-00.dwg

A1 SIZE - 594mm x 841mm

LAST SAVE: 2013/06/03 - 2:02pm
PATH: M:\510276\4ENG\49PRC\DD - General DWG\1-0630M-SK02-001-00.dwg

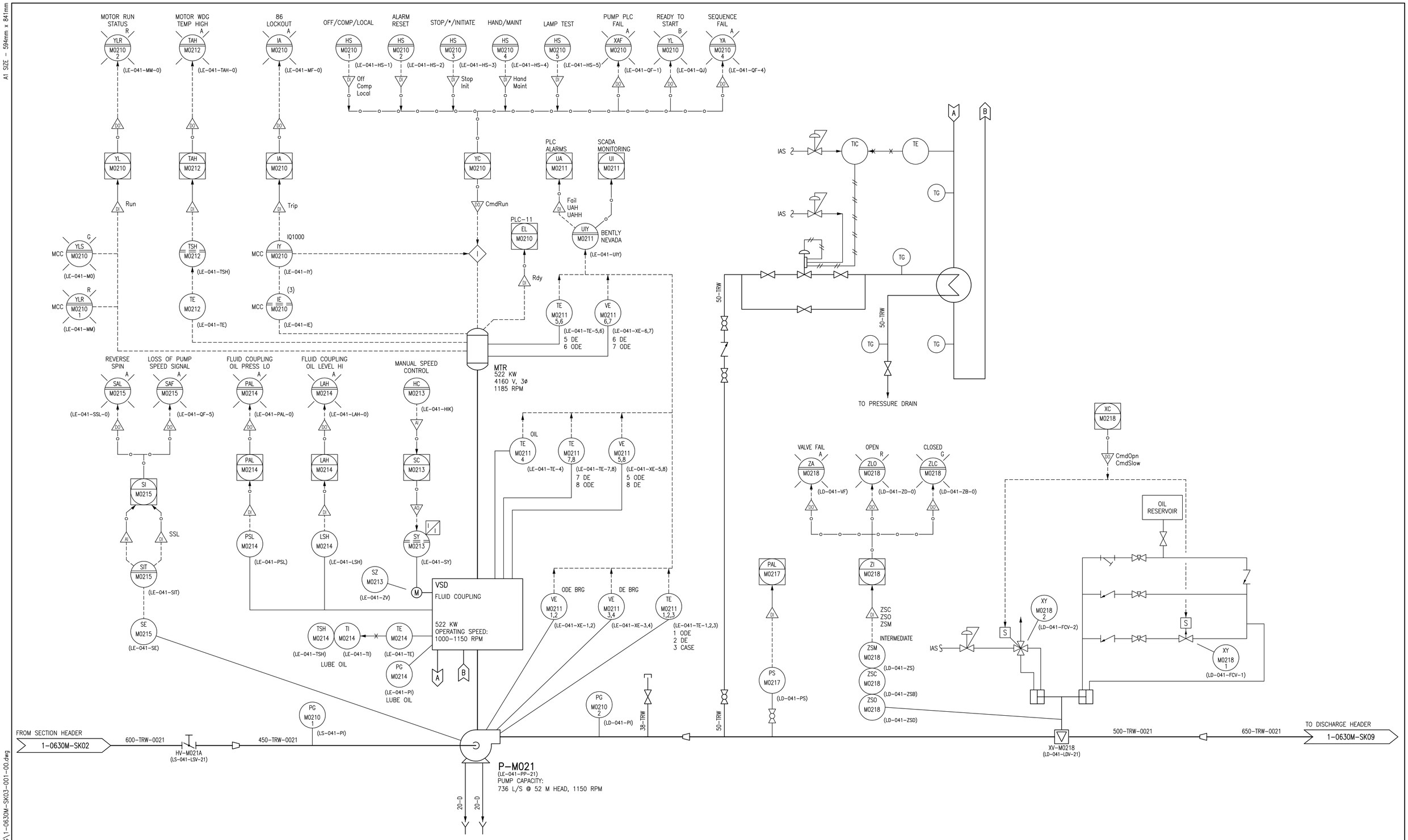

DRAWING NUMBER	REFERENCE DRAWINGS
1-0630A-SK01	PROCESS & INSTRUMENTATION DIAGRAM LEGEND & DETAILS

NOTES:

1. ALL INSTRUMENTS SHOWN IN AN AUXILIARY LOCATION ARE IN THE LOCAL PUMP CONTROL PANEL, UNLESS OTHERWISE DESIGNATED.
2. DRAWINGS 1-0630M-A0005 AND 1-0630M-A0011 REPRESENT THE PREVIOUS P&ID'S. MOST EXISTING DOCUMENTATION IS BASED ON THE IDENTIFICATION SHOWN IN PREVIOUS P&ID DRAWINGS.

APEGM Certificate of Authorization
SNC-Lavalin Inc.
No. 4489

NO.	REVISIONS	DATE	DESIGN	CHECK
00	ISSUED WITH IDENTIFICATION STANDARD	2013/06/03	VE	CJR

SNC·LAVALIN

SNC-LAVALIN INC.
148 Nature Park Way
Winnipeg, MB, Canada R3P 0X7
204-786-8080

DESIGNED BY: EXISTING	CHECKED BY: C. REIMER
DRAWN BY: S. FUNK	APPROVED BY: C. REIMER
SCALE: NTS	RELEASED FOR CONSTRUCTION BY:
DATE: 2012/10/09	DATE:
CONSULTANT NO.: 510276-0000-49DD-0007	

ENGINEER'S SEAL

PRELIMINARY
NOT TO BE USED FOR CONSTRUCTION

Winnipeg
THE CITY OF WINNIPEG
WATER AND WASTE DEPARTMENT

MACLEAN PUMPING STATION

PROCESS & INSTRUMENTATION DIAGRAM
PUMP P-M021

CITY DRAWING NUMBER	SHEET	REV.	SIZE
1-0630M-SK03	001	00	A1

1-0630M-SK03-001-00.dwg

A1 SIZE - 594mm x 841mm

LAST SAVE: 2013/06/03 - 2:02pm
PATH: M:\510276\4ENG\49PRC\DD - General DWG\1-0630M-SK03-001-00.dwg

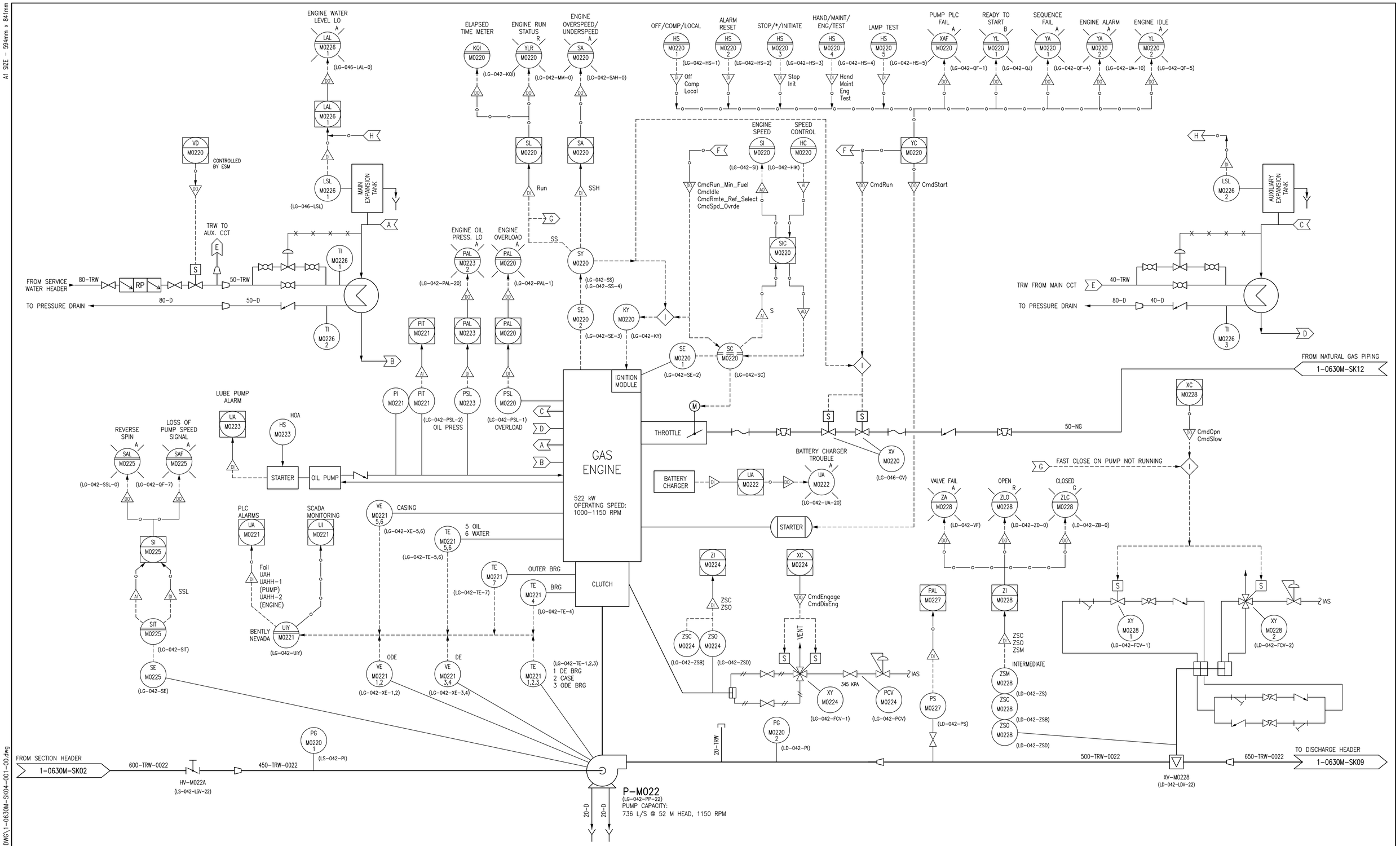

NOTES:

1. ALL INSTRUMENTS SHOWN IN AN AUXILIARY LOCATION ARE IN THE LOCAL PUMP CONTROL PANEL, UNLESS OTHERWISE DESIGNATED.
2. DRAWINGS 1-0630M-A0006 AND 1-0630M-A0011 REPRESENT THE PREVIOUS P&ID'S. MOST EXISTING DOCUMENTATION IS BASED ON THE IDENTIFICATION SHOWN IN PREVIOUS P&ID DRAWINGS.
3. 'ESM' IS THE ENGINE SYSTEM MANAGEMENT.

APEGM Certificate of Authorization
SNC-Lavalin Inc.
No. 4489

NO.	REVISIONS	DATE	DESIGN	CHECK
00	ISSUED WITH IDENTIFICATION STANDARD	2013/06/03	VE	CJR

SNC·LAVALIN
SNC-LAVALIN INC.
148 Nature Park Way
Winnipeg, MB, Canada R3P 0X7
204-786-8080

DESIGNED BY: EXISTING	CHECKED BY: C. REIMER
DRAWN BY: S. FUNK	APPROVED BY: C. REIMER
SCALE: NTS	RELEASED FOR CONSTRUCTION BY:
DATE: 2012/11/02	DATE:
CONSULTANT NO.: 510276-0000-49DD-0008	

ENGINEER'S SEAL

PRELIMINARY
NOT TO BE USED FOR CONSTRUCTION

Winnipeg
THE CITY OF WINNIPEG
WATER AND WASTE DEPARTMENT

MACLEAN PUMPING STATION

PROCESS & INSTRUMENTATION DIAGRAM
PUMP P-M022

CITY DRAWING NUMBER	SHEET	REV.	SIZE
1-0630M-SK04	001	00	A1

DRAWING NUMBER	REFERENCE DRAWINGS
1-0630A-SK01	PROCESS & INSTRUMENTATION DIAGRAM LEGEND & DETAILS

A1 SIZE - 594mm x 841mm

LAST SAVE: 2013/06/03 - 2:03pm
PATH: M:\510276\4ENG\49PRC\DD - General DWG\1-0630M-SK04-001-00.dwg

1-0630M-SK04-001-00.dwg

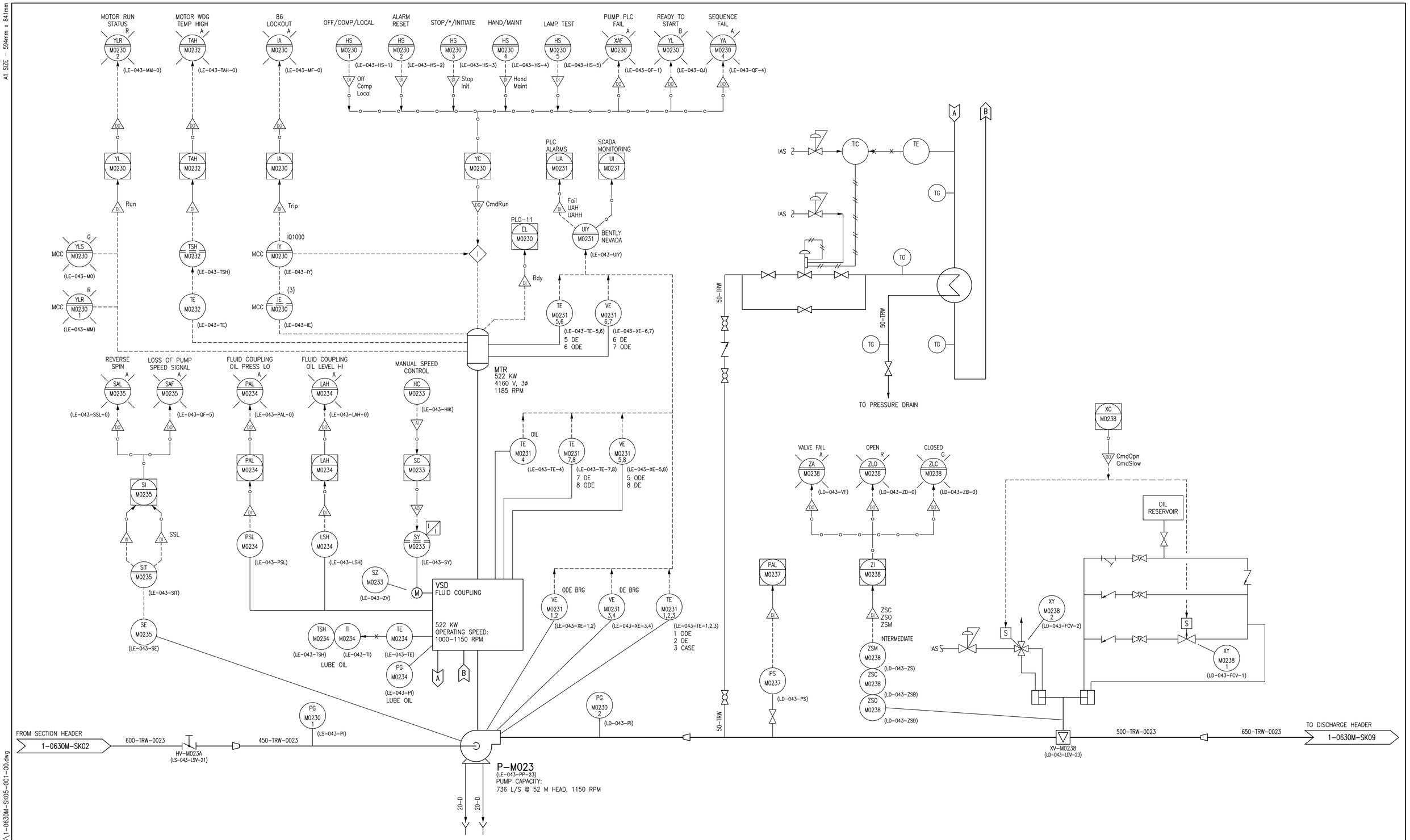

DRAWING NUMBER	REFERENCE DRAWINGS
1-0630A-SK01	PROCESS & INSTRUMENTATION DIAGRAM LEGEND & DETAILS

NOTES:

1. ALL INSTRUMENTS SHOWN IN AN AUXILIARY LOCATION ARE IN THE LOCAL PUMP CONTROL PANEL, UNLESS OTHERWISE DESIGNATED.
2. DRAWINGS 1-0630M-A0007 AND 1-0630M-A0012 REPRESENT THE PREVIOUS P&ID'S. MOST EXISTING DOCUMENTATION IS BASED ON THE IDENTIFICATION SHOWN IN PREVIOUS P&ID DRAWINGS.

APEGM Certificate of Authorization
SNC-Lavalin Inc.
No. 4489

NO.	REVISIONS	DATE	DESIGN	CHECK
00	ISSUED WITH IDENTIFICATION STANDARD	2013/06/03	VE	CJR

SNC·LAVALIN

SNC-LAVALIN INC.
148 Nature Park Way
Winnipeg, MB, Canada R3P 0X7
204-786-8080

DESIGNED BY: EXISTING	CHECKED BY: C. REIMER
DRAWN BY: S. FUNK	APPROVED BY: C. REIMER
SCALE: NTS	RELEASED FOR CONSTRUCTION BY:
DATE: 2012/10/09	DATE:
CONSULTANT NO.: 510276-0000-49DD-0009	

ENGINEER'S SEAL

PRELIMINARY
NOT TO BE USED FOR CONSTRUCTION

Winnipeg
THE CITY OF WINNIPEG
WATER AND WASTE DEPARTMENT

MACLEAN PUMPING STATION

PROCESS & INSTRUMENTATION DIAGRAM
PUMP P-M023

CITY DRAWING NUMBER	SHEET	REV.	SIZE
1-0630M-SK05	001	00	A1

1-0630M-SK05-001-00.dwg

A1 SIZE - 594mm x 841mm

LAST SAVE: 2013/06/03 - 2:03pm
PATH: M:\510276\4ENG\49PRC\DD - General DWG\1-0630M-SK05-001-00.dwg

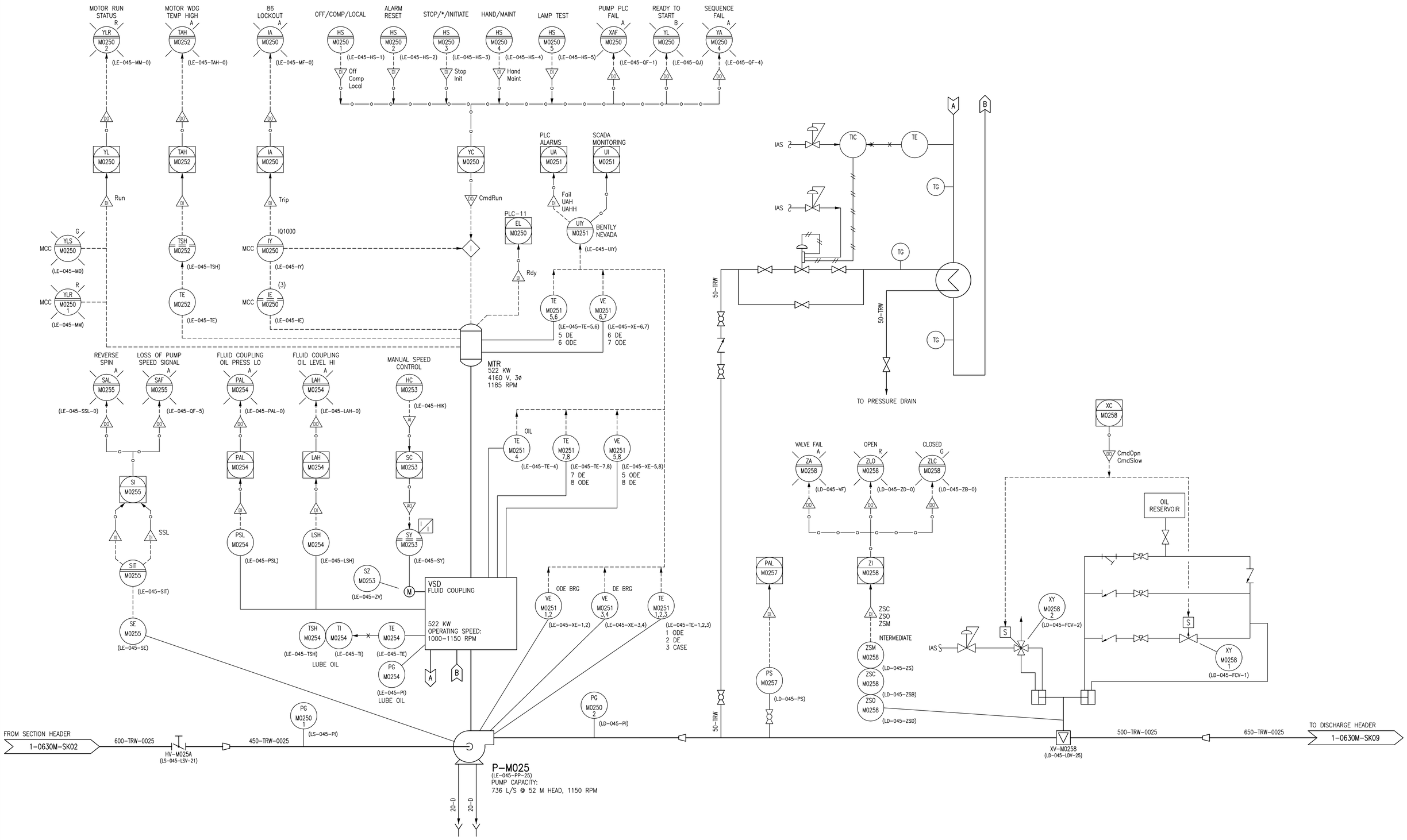

DRAWING NUMBER	REFERENCE DRAWINGS
1-0630A-SK01	PROCESS & INSTRUMENTATION DIAGRAM LEGEND & DETAILS

NOTES:

1. ALL INSTRUMENTS SHOWN IN AN AUXILIARY LOCATION ARE IN THE LOCAL PUMP CONTROL PANEL, UNLESS OTHERWISE DESIGNATED.
2. DRAWINGS 1-0630M-A0009 AND 1-0630M-A0013 REPRESENT THE PREVIOUS P&ID'S. MOST EXISTING DOCUMENTATION IS BASED ON THE IDENTIFICATION SHOWN IN PREVIOUS P&ID DRAWINGS.

APEGM Certificate of Authorization
SNC-Lavalin Inc.
No. 4489

NO.	REVISIONS	DATE	DESIGN	CHECK
00	ISSUED WITH IDENTIFICATION STANDARD	2013/06/03	VE	CJR

SNC·LAVALIN

SNC-LAVALIN INC.
148 Nature Park Way
Winnipeg, MB, Canada R3P 0X7
204-786-8080

DESIGNED BY: EXISTING	CHECKED BY: C. REIMER
DRAWN BY: S. FUNK	APPROVED BY: C. REIMER
SCALE: NTS	RELEASED FOR CONSTRUCTION BY:
DATE: 2012/10/09	DATE:
CONSULTANT NO.: 510276-0000-49DD-0010	

ENGINEER'S SEAL

PRELIMINARY
NOT TO BE USED FOR CONSTRUCTION

Winnipeg
THE CITY OF WINNIPEG
WATER AND WASTE DEPARTMENT

MACLEAN PUMPING STATION

PROCESS & INSTRUMENTATION DIAGRAM
PUMP P-M025

CITY DRAWING NUMBER	SHEET	REV.	SIZE
1-0630M-SK07	001	00	A1

1-0630M-SK07-001-00.dwg

A1 SIZE - 594mm x 841mm

LAST SAVE: 2013/06/03 - 2:03pm
PATH: M:\510276\4ENG\49PRC\DD - General DWG\1-0630M-SK07-001-00.dwg

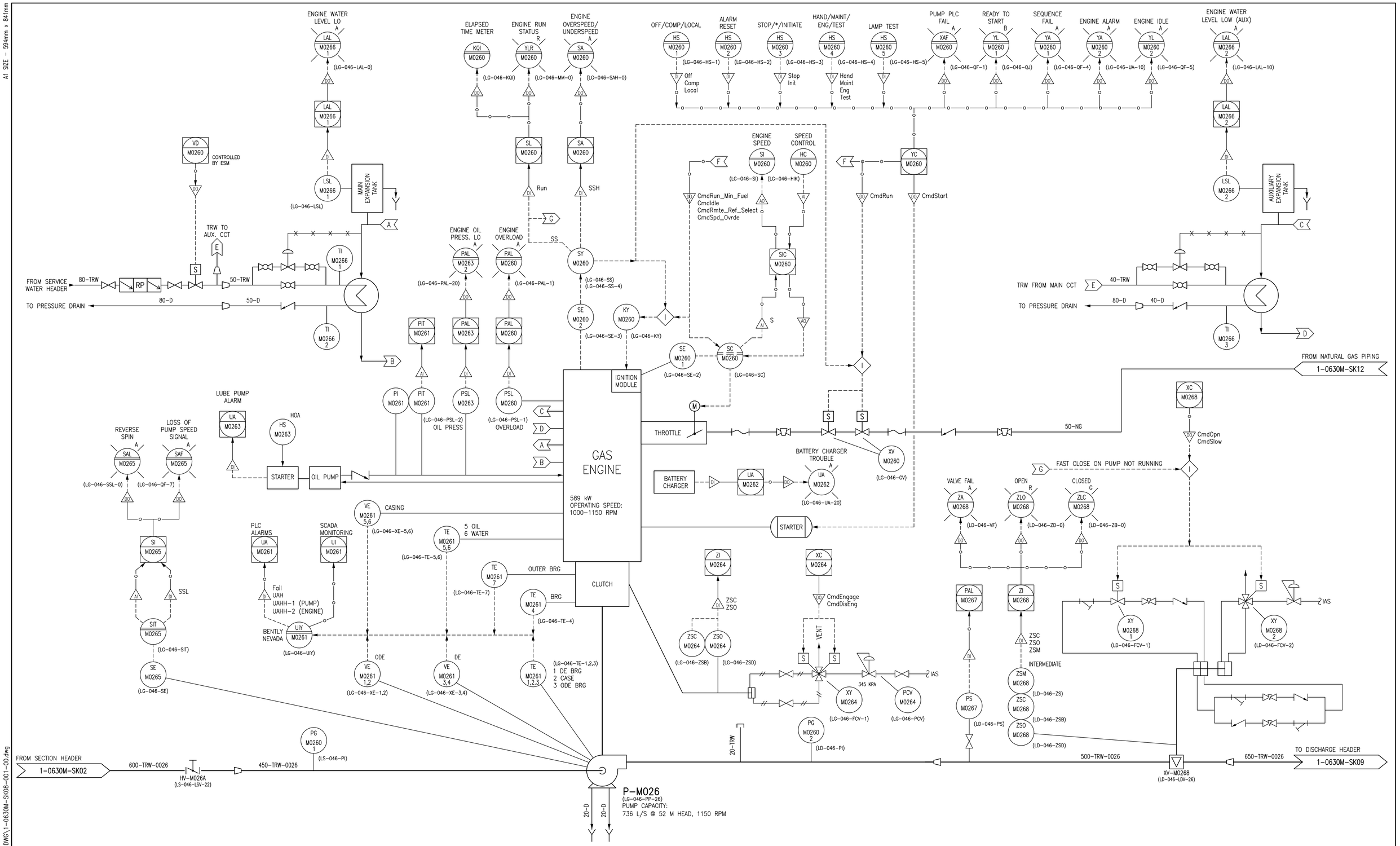

NOTES:

1. ALL INSTRUMENTS SHOWN IN AN AUXILIARY LOCATION ARE IN THE LOCAL PUMP CONTROL PANEL, UNLESS OTHERWISE DESIGNATED.
2. DRAWINGS 1-0630M-A0010 AND 1-0630M-A0013 REPRESENT THE PREVIOUS P&ID'S. MOST EXISTING DOCUMENTATION IS BASED ON THE IDENTIFICATION SHOWN IN PREVIOUS P&ID DRAWINGS.
3. 'ESM' IS THE ENGINE SYSTEM MANAGEMENT.

APEGM Certificate of Authorization
SNC-Lavalin Inc.
No. 4489

NO.	REVISIONS	DATE	DESIGN	CHECK
00	ISSUED WITH IDENTIFICATION STANDARD	2013/06/03	VE	CJR

SNC·LAVALIN
SNC-LAVALIN INC.
148 Nature Park Way
Winnipeg, MB, Canada R3P 0X7
204-786-8080

DESIGNED BY: EXISTING	CHECKED BY: C. REIMER
DRAWN BY: S. FUNK	APPROVED BY: C. REIMER
SCALE: NTS	RELEASED FOR CONSTRUCTION BY:
DATE: 2012/11/02	DATE:
CONSULTANT NO.: 510276-0000-49DD-0011	

ENGINEER'S SEAL

PRELIMINARY
NOT TO BE USED FOR CONSTRUCTION

Winnipeg
THE CITY OF WINNIPEG
WATER AND WASTE DEPARTMENT

MACLEAN PUMPING STATION

PROCESS & INSTRUMENTATION DIAGRAM
PUMP P-M026

CITY DRAWING NUMBER	SHEET	REV.	SIZE
1-0630M-SK08	001	00	A1

DRAWING NUMBER	REFERENCE DRAWINGS
1-0630A-SK01	PROCESS & INSTRUMENTATION DIAGRAM LEGEND & DETAILS

A1 SIZE - 594mm x 841mm

LAST SAVE: 2013/06/03 - 2:04pm
PATH: M:\510276\4ENG\49PRC\DD - General DWG\1-0630M-SK08-001-00.dwg

1-0630M-SK08-001-00.dwg

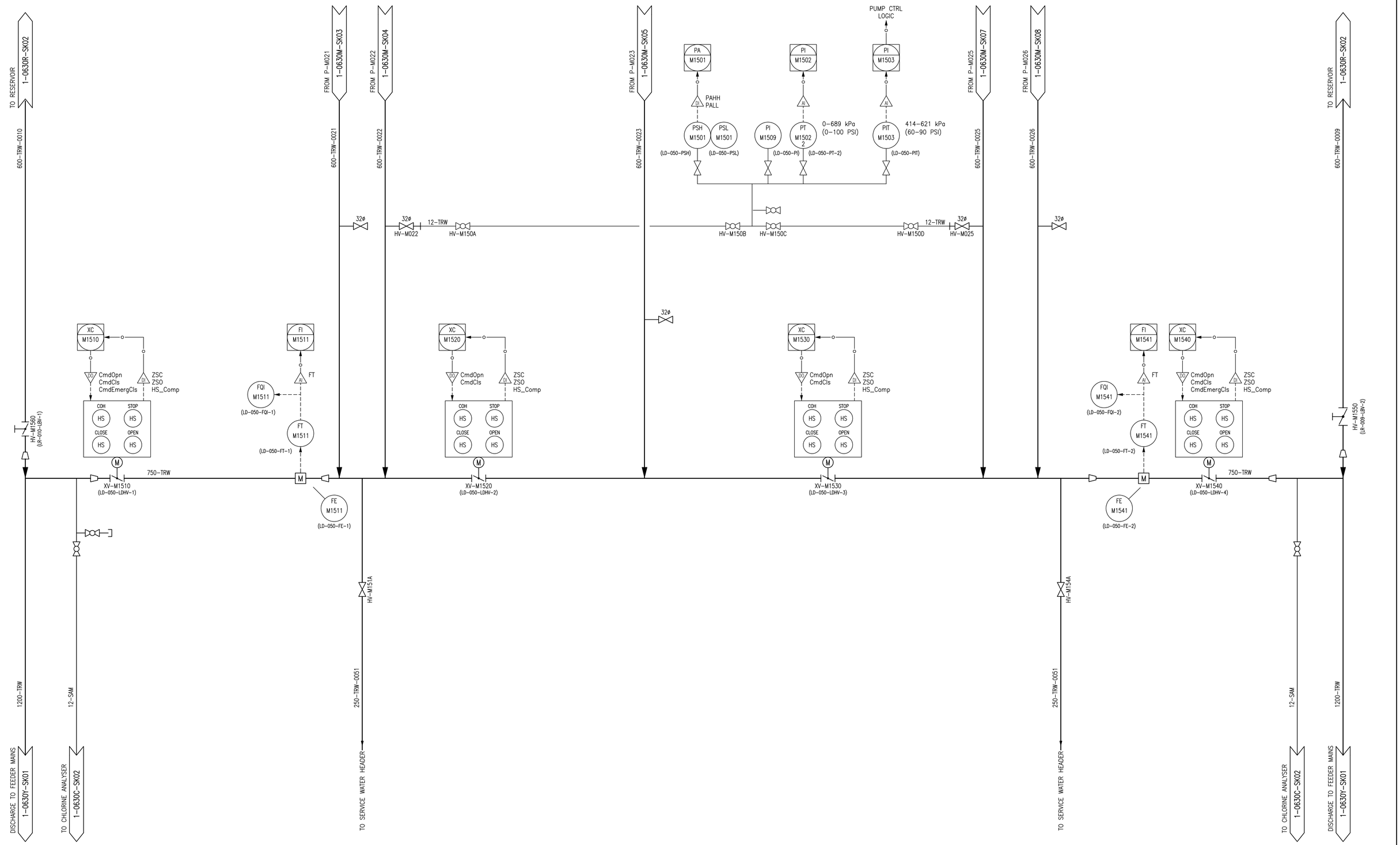

NOTES:

1. DRAWING 1-0630M-A0014 REPRESENTS THE PREVIOUS P&ID. MOST EXITING DOCUMENTATION IS BASED ON THE IDENTIFICATION SHOWN IN PREVIOUS P&ID.

DRAWING NUMBER	REFERENCE DRAWINGS
1-0630A-SK01	PROCESS & INSTRUMENTATION DIAGRAMS LEGEND & DETAILS

APEGM Certificate of Authorization
SNC-Lavalin Inc.
No. 4489

NO.	REVISIONS	DATE	DESIGN	CHECK
00	ISSUED WITH IDENTIFICATION STANDARD	2013/06/03	VE	CJR

SNC·LAVALIN
SNC-LAVALIN INC.
148 Nature Park Way
Winnipeg, MB, Canada R3P 0X7
204-786-8080

DESIGNED BY: EXISTING	CHECKED BY: C. REIMER
DRAWN BY: MJ. PERSSON	APPROVED BY: C. REIMER
SCALE: NTS	RELEASED FOR CONSTRUCTION BY:
DATE: 2012/11/15	DATE:
CONSULTANT NO.: 510276-0000-49DD-0012	

ENGINEER'S SEAL

PRELIMINARY
NOT TO BE USED FOR CONSTRUCTION

Winnipeg
THE CITY OF WINNIPEG
WATER AND WASTE DEPARTMENT

MACLEAN PUMPING STATION

PROCESS & INSTRUMENTATION DIAGRAM
DISCHARGE HEADER

CITY DRAWING NUMBER	SHEET	REV.	SIZE
1-0630M-SK09	001	00	A1

1-0630M-SK09-001-00.dwg

A1 SIZE - 594mm x 841mm

LAST SAVE: 2013/06/03 - 2:04pm
PATH: M:\510276\4ENG\49PRC\DD - General DWG\1-0630M-SK09-001-00.dwg

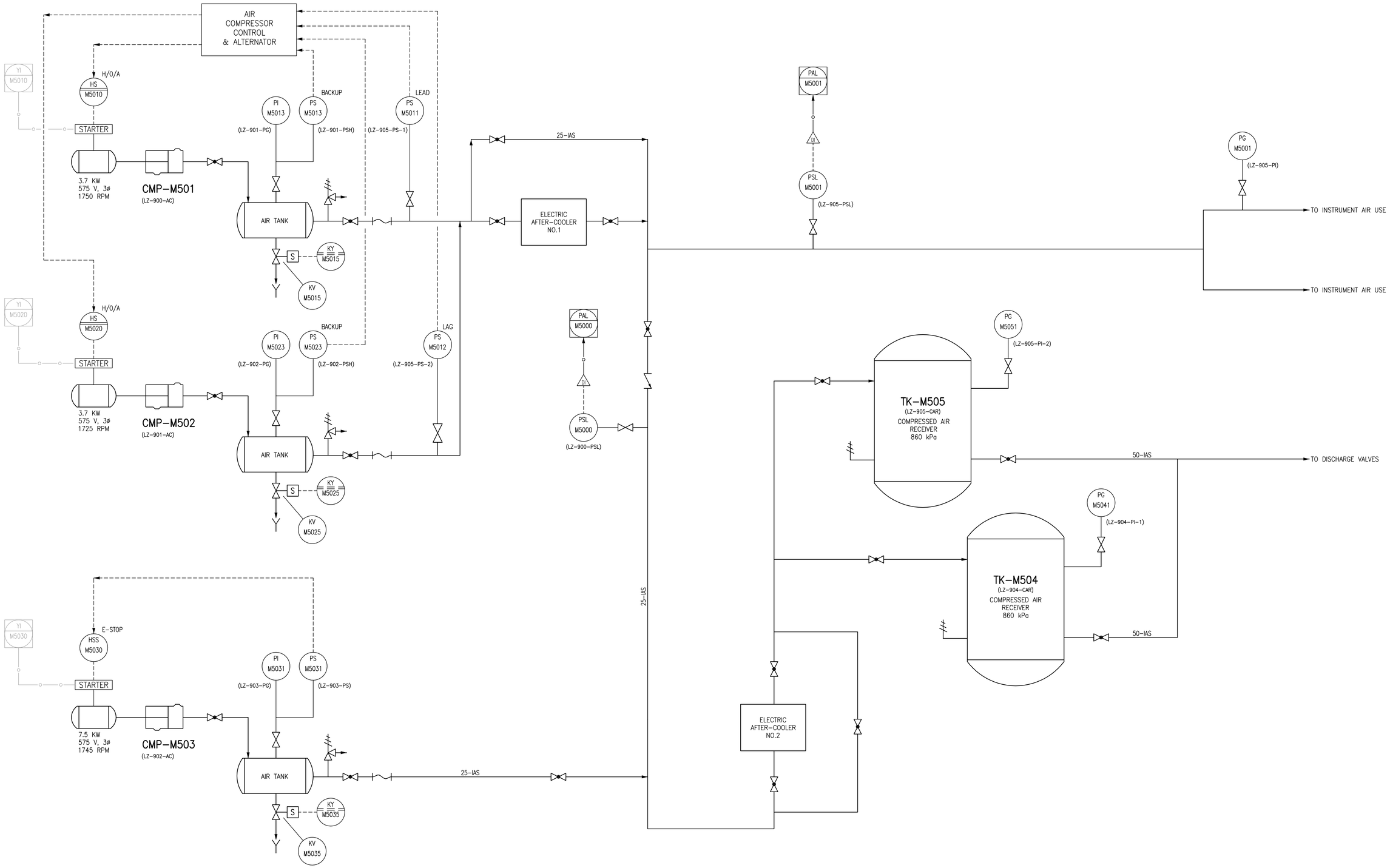

NOTES:

1. DRAWING 1-0630M-A0017 REPRESENTS THE PREVIOUS P&ID. MOST EXISTING DOCUMENTATION IS BASED ON THE IDENTIFICATION SHOWN IN PREVIOUS P&ID.
2. ALL INSTRUMENTS SHOWN IN AN AUXILIARY LOCATION ARE IN THE COMPRESSOR CONTROL PANEL LCP-M500.

APEGM Certificate of Authorization
SNC-Lavalin Inc.
No. 4489

NO.	REVISIONS	DATE	DESIGN	CHECK
00	ISSUED WITH IDENTIFICATION STANDARD	2013/06/03	VE	CJR

SNC·LAVALIN
SNC-LAVALIN INC.
148 Nature Park Way
Winnipeg, MB, Canada R3P 0X7
204-786-8080

DESIGNED BY: EXISTING	CHECKED BY: C. REIMER
DRAWN BY: S. FUNK	APPROVED BY: C. REIMER
SCALE: NTS	RELEASED FOR CONSTRUCTION BY:
DATE: 2012/12/11	DATE:
CONSULTANT NO.: 510276-0000-49DD-0016	

ENGINEER'S SEAL

PRELIMINARY
NOT TO BE USED FOR CONSTRUCTION

Winnipeg
THE CITY OF WINNIPEG
WATER AND WASTE DEPARTMENT

MACLEAN PUMPING STATION

PROCESS & INSTRUMENTATION DIAGRAM
COMPRESSED AIR SYSTEM

CITY DRAWING NUMBER	SHEET	REV.	SIZE
1-0630M-SK10	001	00	A1

DRAWING NUMBER	REFERENCE DRAWINGS
1-0630A-SK01	PROCESS & INSTRUMENTATION DIAGRAM LEGEND & DETAILS

A1 SIZE - 594mm x 841mm

LAST SAVE: 2013/06/03 - 2:04pm
PATH: M:\510276\4ENG\49PRC\DD - General DWG\1-0630M-SK10-001-00.dwg

1-0630M-SK10-001-00.dwg

A1 SIZE – 594mm x 841mm

INCONSISTENCIES:

I–1 NO GENERATOR ALARM IS CURRENTLY AVAILABLE.

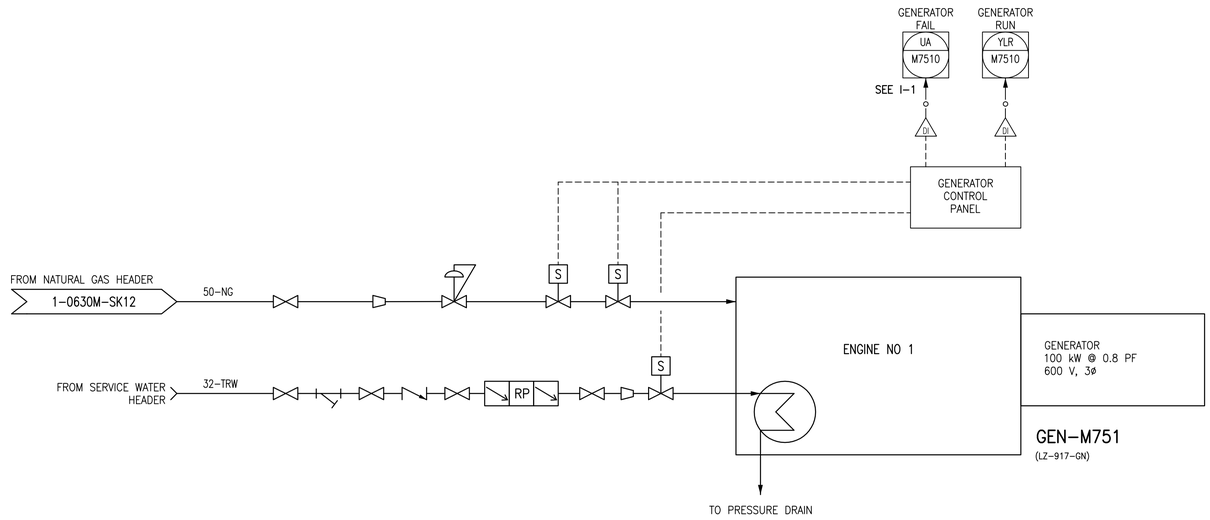

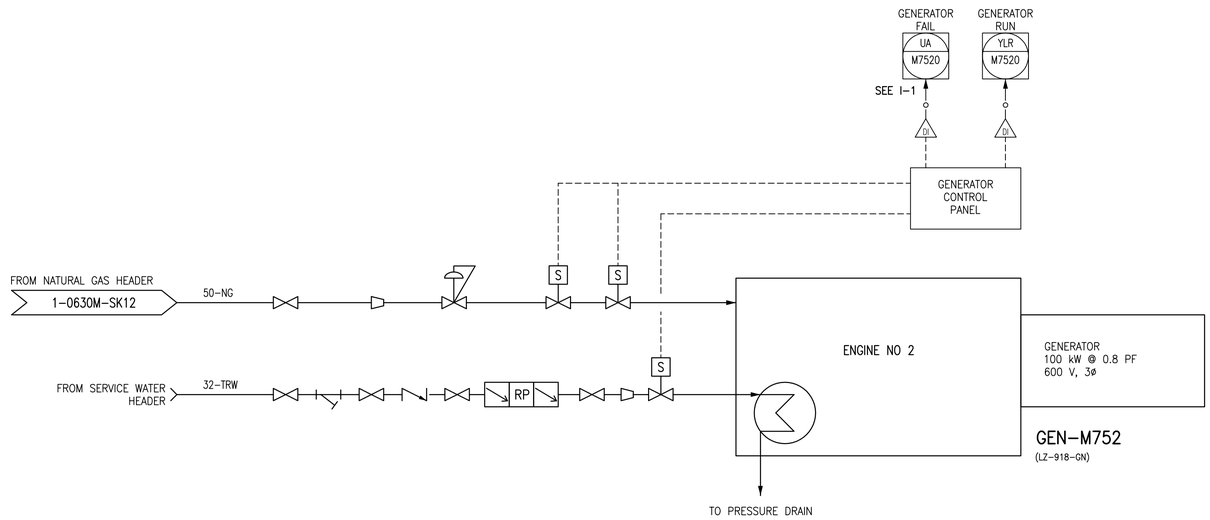

NOTES:

1. DRAWING 1–0630M–A0019 REPRESENTS THE PREVIOUS P&ID. MOST EXISTING DOCUMENTATION IS BASED ON THE IDENTIFICATION SHOWN IN PREVIOUS P&ID.

DRAWING NUMBER	REFERENCE DRAWINGS
1–0630A–SK01	PROCESS & INSTRUMENTATION DIAGRAM LEGEND & DETAILS

APEGM Certificate of Authorization
SNC-Lavalin Inc.
No. 4489

NO.	REVISIONS	DATE	DESIGN	CHECK
00	ISSUED WITH IDENTIFICATION STANDARD	2013/06/03	VE	CJR

SNC·LAVALIN

SNC–LAVALIN INC.
148 Nature Park Way
Winnipeg, MB, Canada R3P 0X7
204–786–8080

DESIGNED BY: EXISTING	CHECKED BY: C. REIMER
DRAWN BY: S. FUNK	APPROVED BY: C. REIMER
SCALE: NTS	RELEASED FOR CONSTRUCTION BY:
DATE: 2012/12/10	DATE:
CONSULTANT NO.: 510276–0000–49DD–0017	

ENGINEER'S SEAL

PRELIMINARY
NOT TO BE USED FOR CONSTRUCTION

Winnipeg
THE CITY OF WINNIPEG
WATER AND WASTE DEPARTMENT

MACLEAN PUMPING STATION

PROCESS & INSTRUMENTATION DIAGRAM
GEN–M751 & GEN–M752

CITY DRAWING NUMBER	SHEET	REV.	SIZE
1–0630M–SK11	001	00	A1

LAST SAVE: 2013/06/03 – 2:04pm
PATH: M:\510276\4ENG\49PRC\DD – General DWG\1–0630M–SK11–001–00.dwg

1–0630M–SK11–001–00.dwg

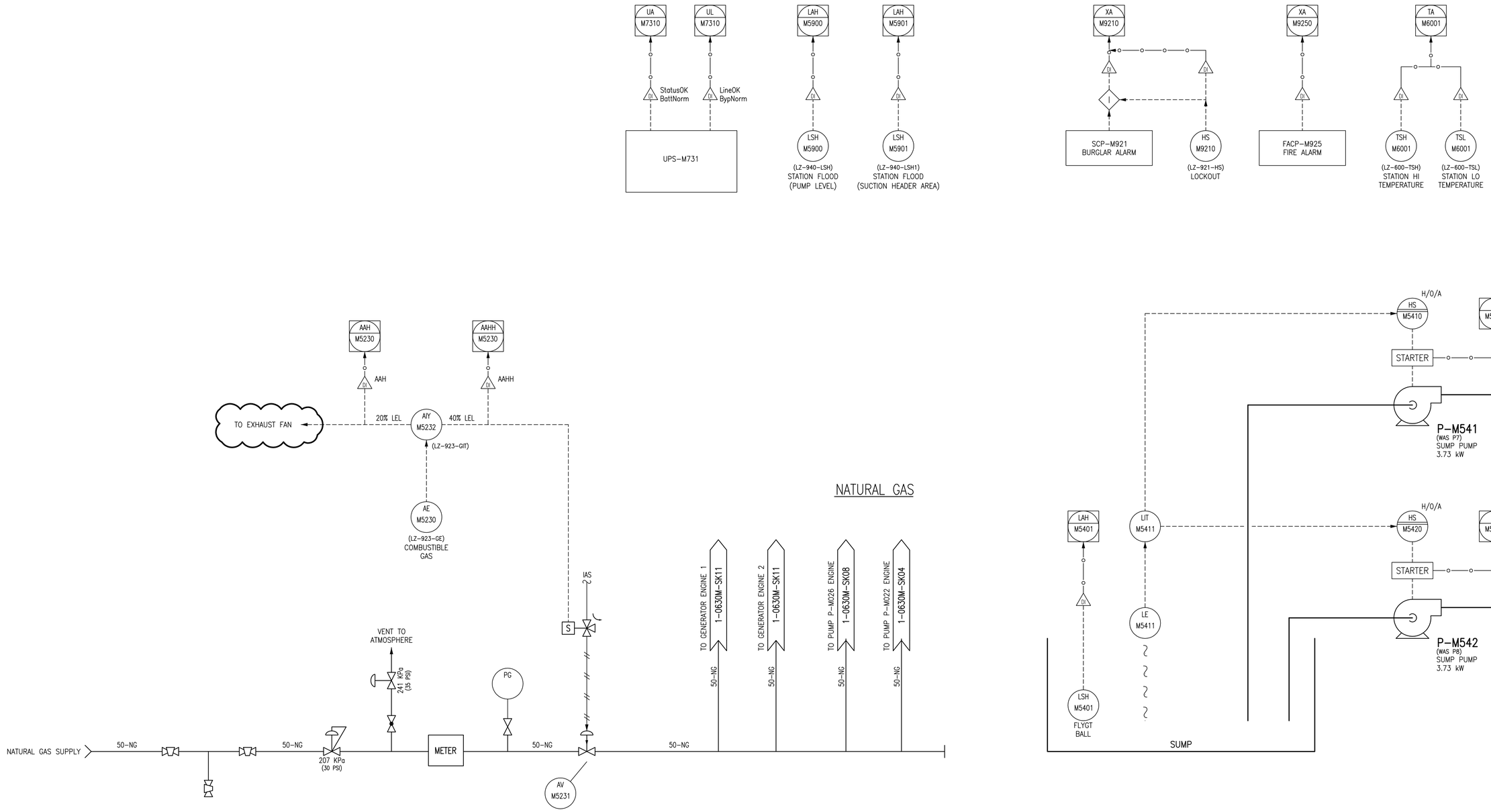

NOTES:

1. DRAWING 1–0630M–A0020 REPRESENTS THE PREVIOUS P&ID. MOST EXISTING DOCUMENTATION IS BASED ON THE IDENTIFICATION SHOWN IN PREVIOUS P&ID.

DRAWING NUMBER	REFERENCE DRAWINGS
1–0630A–SK01	PROCESS & INSTRUMENTATION DIAGRAM LEGEND & DETAILS

APEGM Certificate of Authorization
SNC-Lavalin Inc.
No. 4489

NO.	REVISIONS	DATE	DESIGN	CHECK
00	ISSUED WITH IDENTIFICATION STANDARD	2013/06/03	VE	CJR

SNC·LAVALIN

SNC–LAVALIN INC.
148 Nature Park Way
Winnipeg, MB, Canada R3P 0X7
204–786–8080

DESIGNED BY: EXISTING	CHECKED BY: C. REIMER
DRAWN BY: S. FUNK	APPROVED BY: C. REIMER
SCALE: NTS	RELEASED FOR CONSTRUCTION BY:
DATE: 2012/12/12	DATE:
CONSULTANT NO.: 510276–0000–49DD–0018	

ENGINEER'S SEAL

PRELIMINARY
NOT TO BE USED FOR CONSTRUCTION

Winnipeg
THE CITY OF WINNIPEG
WATER AND WASTE DEPARTMENT

MACLEAN PUMPING STATION

PROCESS & INSTRUMENTATION DIAGRAM
MISCELLANEOUS

CITY DRAWING NUMBER	SHEET	REV.	SIZE
1–0630M–SK12	001	00	A1

A1 SIZE – 594mm x 841mm

LAST SAVE: 2013/06/03 – 2:05pm
PATH: M:\510276\4ENG\49PRC\DD – General DWG\1–0630M–SK12–001–00.dwg

1–0630M–SK12–001–00.dwg

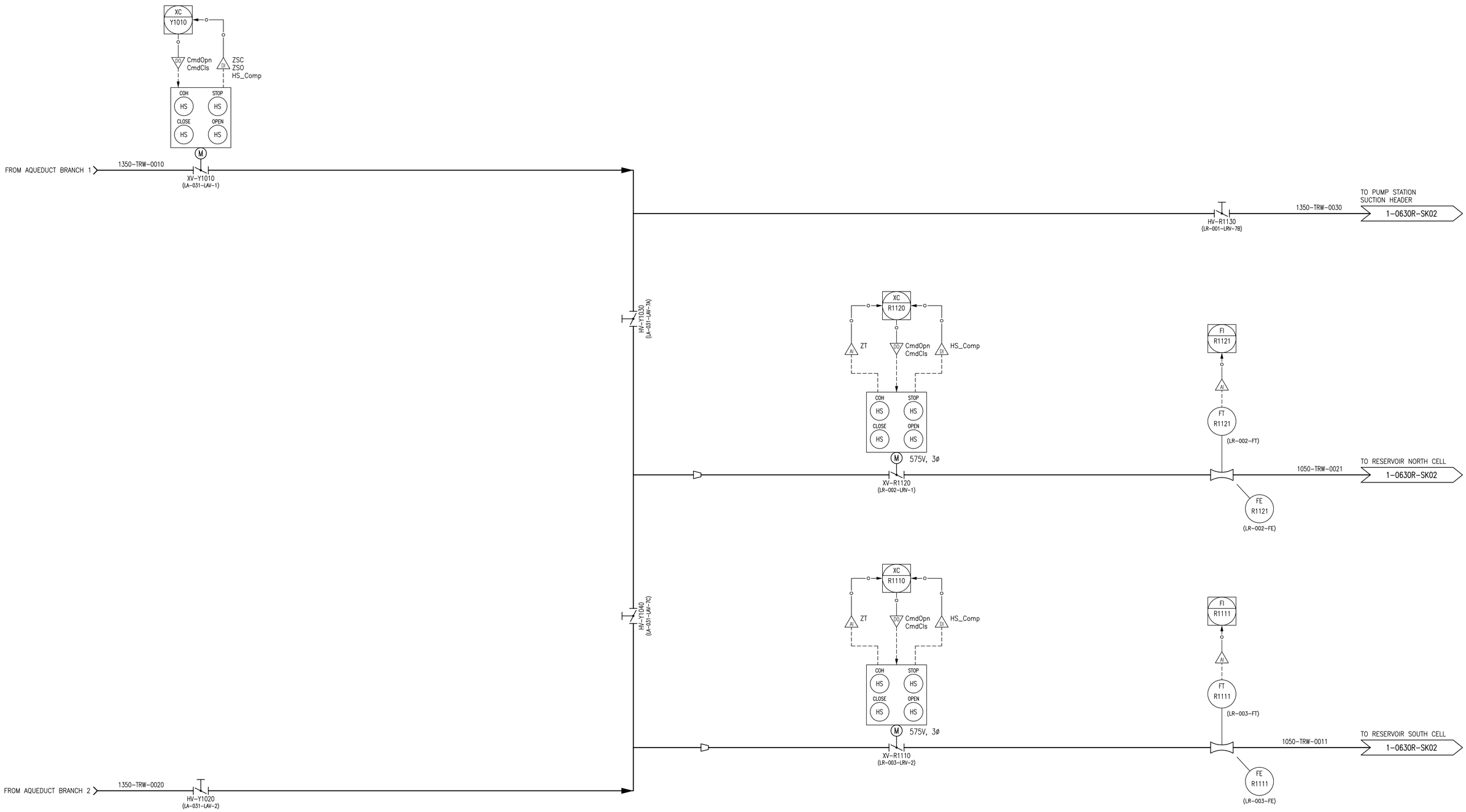

NOTES:

1. DRAWING 1-0630M-A0002 REPRESENTS THE PREVIOUS P&ID. MOST EXISTING DOCUMENTATION IS BASED ON THE IDENTIFICATION SHOWN IN PREVIOUS P&ID.

DRAWING NUMBER	REFERENCE DRAWINGS
1-0630A-SK01	PROCESS & INSTRUMENTATION DIAGRAMS LEGEND & DETAILS

APEGM Certificate of Authorization
SNC-Lavalin Inc.
No. 4489

NO.	REVISIONS	DATE	DESIGN	CHECK
00	ISSUED WITH IDENTIFICATION STANDARD	2013/06/03	VE	CJR

SNC·LAVALIN

SNC-LAVALIN INC.
148 Nature Park Way
Winnipeg, MB, Canada R3P 0X7
204-786-8080

DESIGNED BY: EXISTING	CHECKED BY: C. REIMER
DRAWN BY: S. FUNK	APPROVED BY: C. REIMER
SCALE: NTS	RELEASED FOR CONSTRUCTION BY:
DATE: 2012/11/05	DATE:
CONSULTANT NO.: 510276-0000-49DD-0004	

ENGINEER'S SEAL

PRELIMINARY
NOT TO BE USED FOR CONSTRUCTION

Winnipeg
THE CITY OF WINNIPEG
WATER AND WASTE DEPARTMENT

MACLEAN PUMPING STATION

PROCESS & INSTRUMENTATION DIAGRAM
RESERVOIR FILL VALVES

CITY DRAWING NUMBER	SHEET	REV.	SIZE
1-0630R-SK01	001	00	A1

A1 SIZE - 594mm x 841mm

LAST SAVE: 2013/06/03 - 2:05pm
PATH: M:\510276\4ENG\49PRC\DD - General DWG\1-0630R-SK01-001-00.dwg

1-0630R-SK01-001-00.dwg

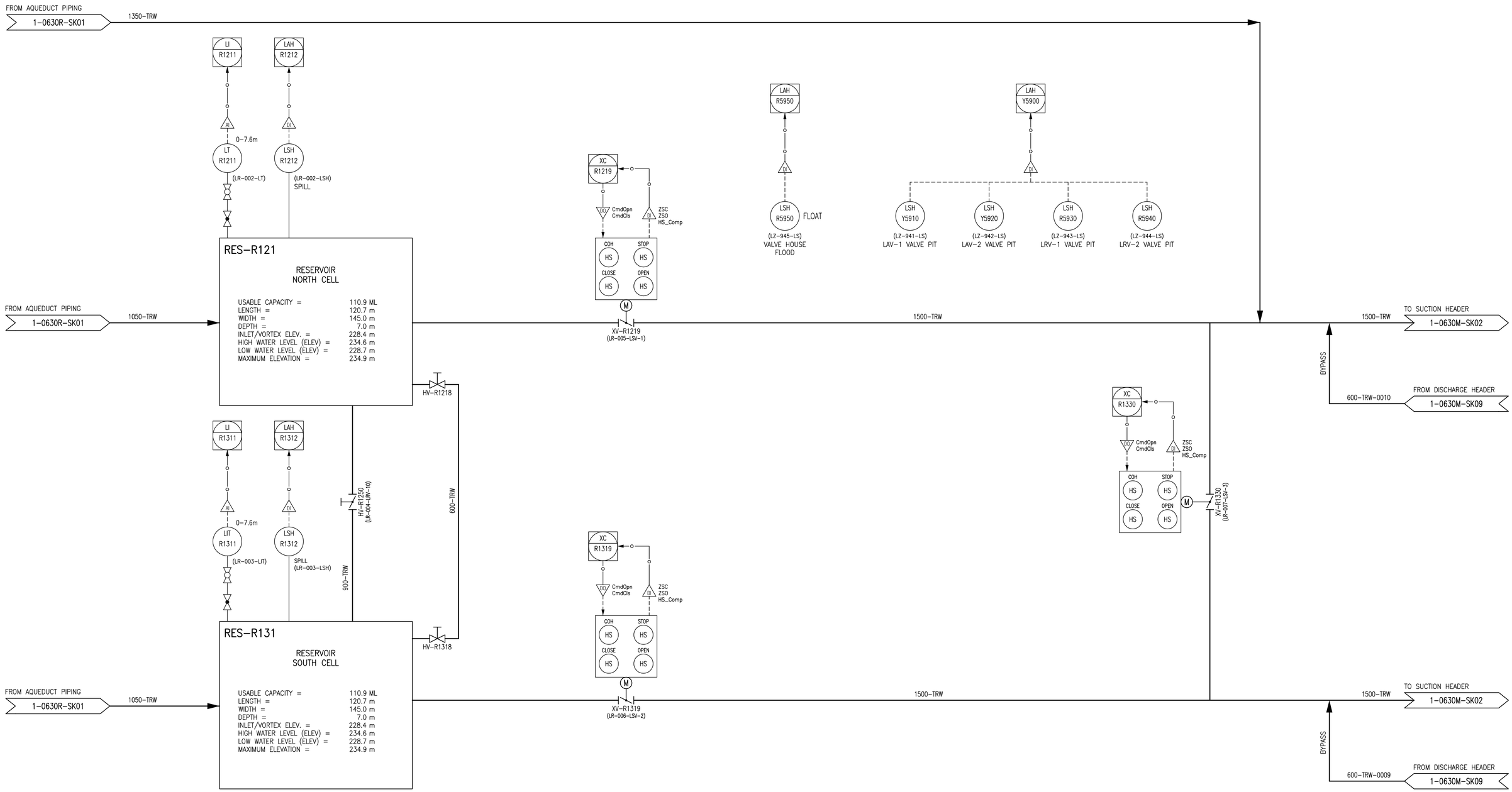

NOTES:

1. DRAWING 1-0630M-A0003 REPRESENTS THE PREVIOUS P&ID. MOST EXISTING DOCUMENTATION IS BASED ON THE IDENTIFICATION SHOWN IN PREVIOUS P&ID.

DRAWING NUMBER	REFERENCE DRAWINGS
1-0630A-SK01	PROCESS & INSTRUMENTATION DIAGRAMS LEGEND & DETAILS

APEGM Certificate of Authorization
SNC-Lavalin Inc.
No. 4489

NO.	REVISIONS	DATE	DESIGN	CHECK
00	ISSUED WITH IDENTIFICATION STANDARD	2013/06/03	VE	CJR

SNC·LAVALIN

SNC-LAVALIN INC.
148 Nature Park Way
Winnipeg, MB, Canada R3P 0X7
204-786-8080

DESIGNED BY: EXISTING	CHECKED BY: C. REIMER
DRAWN BY: MJ. PERSSON	APPROVED BY: C. REIMER
SCALE: NTS	RELEASED FOR CONSTRUCTION BY:
DATE: 2012/11/30	DATE:
CONSULTANT NO.: 510276-0000-49DD-0005	

ENGINEER'S SEAL

PRELIMINARY
NOT TO BE USED FOR CONSTRUCTION

Winnipeg
THE CITY OF WINNIPEG
WATER AND WASTE DEPARTMENT

MACLEAN PUMPING STATION

PROCESS & INSTRUMENTATION DIAGRAM
RESERVOIR CELLS

CITY DRAWING NUMBER	SHEET	REV.	SIZE
1-0630R-SK02	001	00	A1

A1 SIZE - 594mm x 841mm

LAST SAVE: 2013/06/03 - 2:05pm
PATH: M:\510276\4ENG\49PRC\DD - General DWG\1-0630R-SK02-001-00.dwg

1-0630R-SK02-001-00.dwg

A1 SIZE - 594mm x 841mm

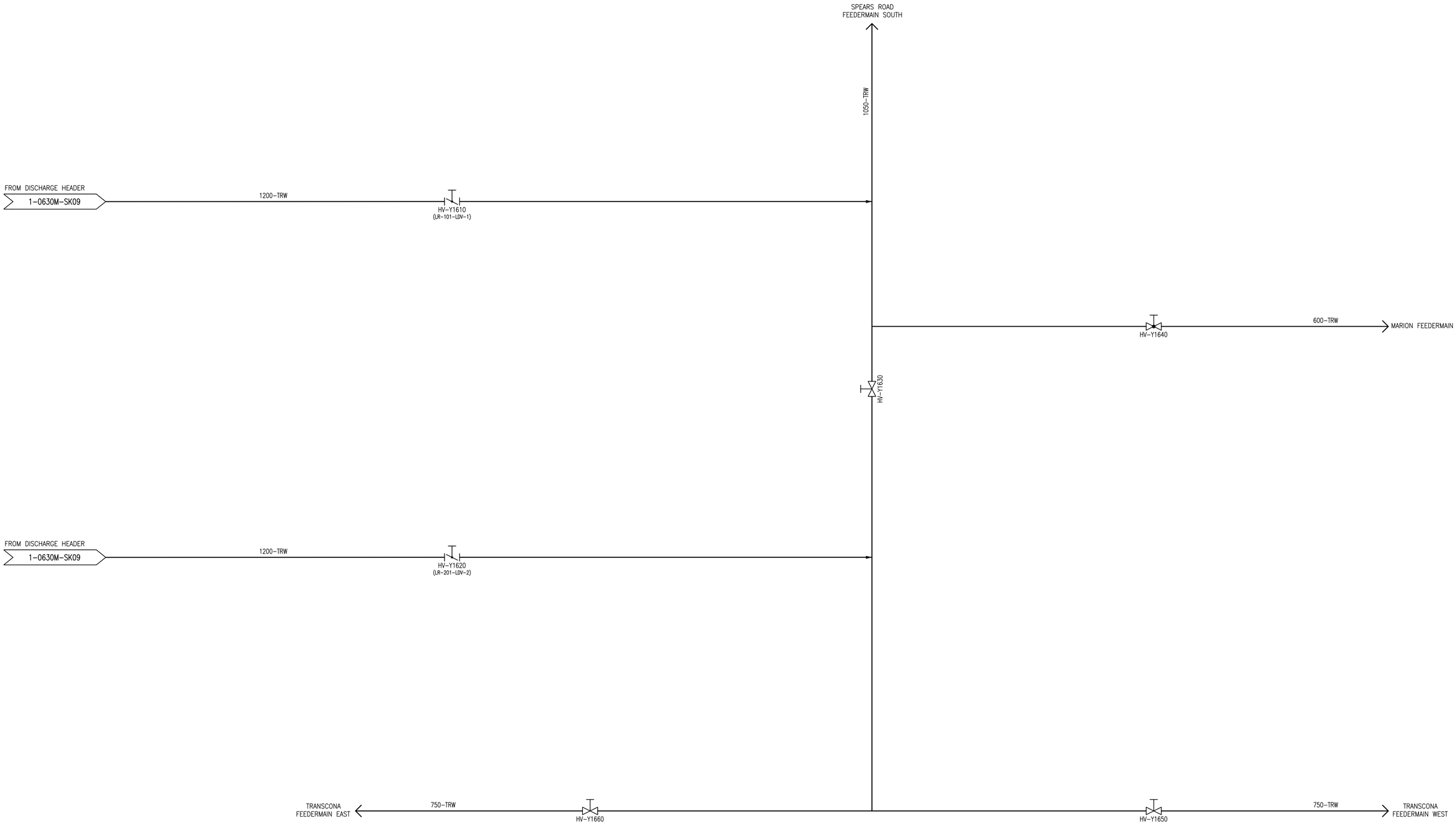

NOTES:

1. DRAWING 1-0630M-A0015 REPRESENTS THE PREVIOUS P&ID. MOST EXITING DOCUMENTATION IS BASED ON THE IDENTIFICATION SHOWN IN PREVIOUS P&ID.

DRAWING NUMBER	REFERENCE DRAWINGS
1-0630A-SK01	PROCESS & INSTRUMENTATION DIAGRAMS LEGEND & DETAILS

APEGM Certificate of Authorization
SNC-Lavalin Inc.
No. 4489

NO.	REVISIONS	DATE	DESIGN	CHECK
00	ISSUED WITH IDENTIFICATION STANDARD	2013/06/03	VE	CJR

SNC·LAVALIN

SNC-LAVALIN INC.
148 Nature Park Way
Winnipeg, MB, Canada R3P 0X7
204-786-8080

DESIGNED BY: V. ELIMBAN	CHECKED BY: C. REIMER
DRAWN BY: MJ. PERSSON	APPROVED BY: C. REIMER
SCALE: NTS	RELEASED FOR CONSTRUCTION BY:
DATE: 2012/11/15	DATE:
CONSULTANT NO.: 510276-0000-49DD-0013	

ENGINEER'S SEAL

PRELIMINARY
NOT TO BE USED FOR CONSTRUCTION

Winnipeg
THE CITY OF WINNIPEG
WATER AND WASTE DEPARTMENT

MACLEAN PUMPING STATION

PROCESS & INSTRUMENTATION DIAGRAM
DISCHARGE TO FEEDERMAINS

CITY DRAWING NUMBER	SHEET	REV.	SIZE
1-0630Y-SK01	001	00	A1

LAST SAVE: 2013/06/03 - 2:06pm
PATH: M:\510276\4ENG\49PRC\DD - General DWG\1-0630Y-SK01-001-00.dwg

1-0630Y-SK01-001-00.dwg